higher education & training

Department:
Higher Education and Training
REPUBLIC OF SOUTH AFRICA

MARKING GUIDELINE

NATIONAL CERTIFICATE

PLANT OPERATION THEORY N3

13 April 2021

This marking guideline consists of 6 pages.

Copyright reserved

QUESTION 1: CHEMISTRY AND CHEMICAL PROCESSES

1.1 1.1.1 True
1.1.2 True
1.1.3 False
1.1.4 False
1.1.5 True

(5 × 1) (5)

1.2 1.2.1
- The reactants in this phase are all the same or are in the same phase or state. (Any 1 × 2) (2)

1.2.2
- Vulcanisation is the process where the substances are heated so that the bridges between the chains can form.

OR

Vulcanization is the heating with sulphur to from sulphur bridges between two chains. (Any 1 × 2) (2)

1.2.3
- Polythene is made of hydrocarbon ethylene which is heated under pressure
- and undergoes an additional reaction where substances react with themselves.
- It is the easiest example of synthetic polymerisation. (1 × 3) (3)

1.3 $C_2H_{2(gas)}$✓ + $H_2O_{(steam)}$✓ ⟶ $C_2H_5OH_{(gas)}$✓ (3)

1.4
- When heated they become soft and will melt.
- When cooled down, they become hard again without losing their properties.
- They will burn when overheated.
- They are readily dissolved in organic solvents such as acetone, benzene, etc. (Any 4 × 1) (4)

1.5 1.5.1 Teflon

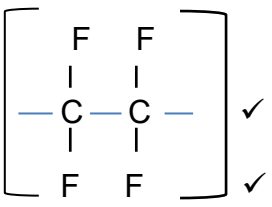

✓ ✓ ✓ (3)

1.5.2 Butadiene

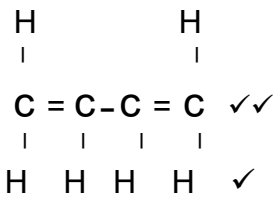

✓✓ ✓ (3)

[25]

QUESTION 2: COMBUSTION, FUELS AND THERMAL INSULATION

2.1
- Made of material with small individual air-filled cells, separated from one another.
- Material consists of foam rubber, foam glass or foam plastic.
- Available in blocks and stiff or flexible sheets.
- Most of cell-type materials are water-resistant.
- External waterproofing is not required. (Any 5 × 1) (5)

2.2
- No waterproofing
- Vibration
- Physical ill-treatment (Any 3 × 1) (3)

2.3
- Anthracite
- Semi-anthracite
- Bituminous coal
- Pulverized coal (Any 3 × 1) (3)

2.4 $C_2H_5OH + 3O_2$✓ $\longrightarrow$ $2CO_2 + 3H_2O$✓
[(2 × 12) + (5 × 1) + (16 + 1)] kg of C_2H_5OH needs 46 kg/mol✓
[(3 × 16 × 2)] of O_2 = 96 kg/mol✓
$= \frac{6 \times 96}{46}$
= 12,522 kg of O_2 ✓
Air contains 23% of oxygen by mass = 12,522 ÷ 0,23 kg of O_2
= 54,443 kg of air✓
Combustion takes place in the presence of 3% excess combustion air.
Total combustion air required = 54,443 + 1,03
= 56,076
= 56,08 kg of air✓ (7)

2.5
- Handling is relatively easy
- Burns with little or no ash (Any 2 × 1) (2)

[20]

QUESTION 3: STEAM BOILERS AND STEAM TRAPS

3.1 3.1.1
- They discharge the water from condensation from the steam line.
- They discharge any air present in the lines or equipment.
- Maximize equipment capacity
- Maximize heat transfer
- Less change of corrosion
- Elimination of water hammer
- Dilution of steam
- Prevent steam losses (Any 2 × 1) (2)

3.1.2 To decrease corrosion (1)

3.1.3 Leakage of steam will result in latent heat evaporation✓ and cannot be used.✓

OR

Inefficient usage of energy. (Any 1 × 2) (2)

3.1.4
- Mechanical traps
- Thermostatic steam traps
- Thermodynamic steam traps (3)

3.2 3.2.1
- Latent heat is when the heat supplied causes a change in state
- without a change in temperature. (2)

3.2.2
- Dry, saturated steam is a steam that is produced that does not have a single particle of water in it. ✓✓
- or does not contain suspended water at all which means that the steam is at saturation temperature✓
- and has absorbed all the latent heat of evaporation. ✓ (4)

3.2.3
- Saturation temperature is the temperature at which water will be converted into steam.✓✓
- The temperature will depend upon the pressure of the surface of the water. ✓ (3)

3.2.4
- After the flue gas left the superheated tubes, the economiser still contains energy.
- This energy is utilised to heat the feed water by means of the economiser.
- The heat is conducted to the feed water causing the water temperature to rise (increase). (3)

[20]

QUESTION 4: HEAT TRANSFER

4.1 4.1.1 True
4.1.2 True
4.1.3 False
4.1.4 False
4.1.5 False
4.1.6 True

(6 × 1) (6)

4.2

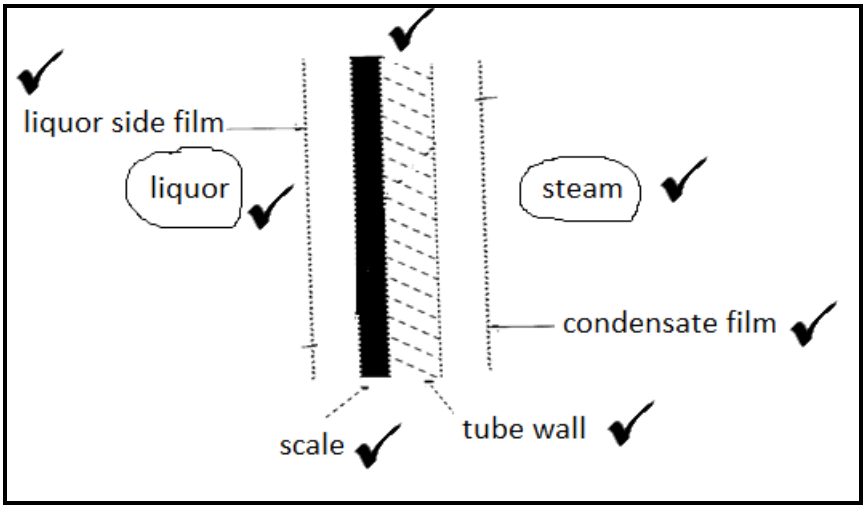

(7)

4.3
- Spray ponds
- Cooling towers
- Fractionation and distillation columns
- Steam strippers
- Absorbers (Any 5 × 1) (5)

4.4
- Conduction is the transfer of heat from one molecule to another, which are in direct contact

  OR
  Heat can be transferred between the molecules within a substance and it can flow from one substance to another. (Any 1 × 2) (2)

[20]

QUESTION 5: COMPRESSION, COOLING, PUMPS AND INSTRUMENTATION

5.1
- Ammonia
- Lithium bromide (2)

5.2

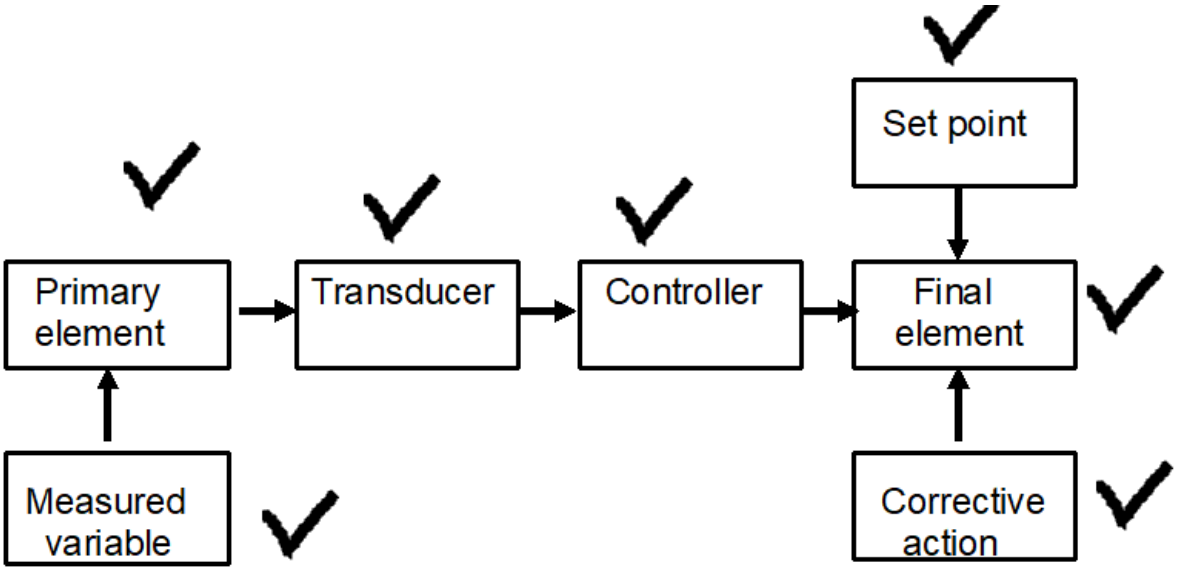

OR

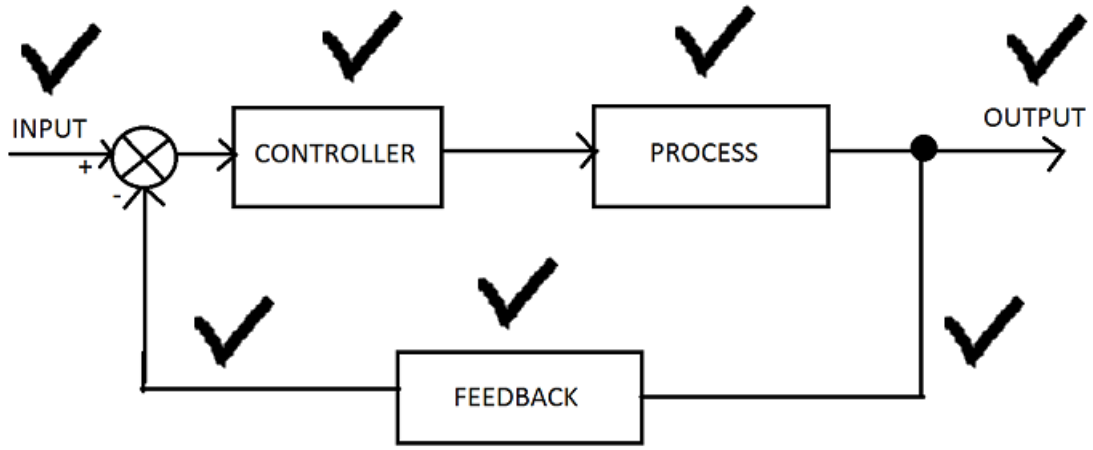

(Any 1 × 7)

5.3
- It should not be poisonous.
- It must be environmentally friendly.
- It should not be corrosive.
- It should boil at low temperatures at atmospheric pressure.
- It should require a large amount of latent heat of vaporisation to change it from a liquid to a gas after its boiling point has been reached.
- It should not be expensive.
- It should have a low condensing pressure.
- It should have an unpleasant odour.
- It should have an ideal pressure/temperature curve.

(Any 6 × 1) (6)
[15]

TOTAL: 100

Copyright reserved