higher education & training

Department:
Higher Education and Training
REPUBLIC OF SOUTH AFRICA

NATIONAL CERTIFICATE

PLANT OPERATION THEORY N2

(11040012)

16 April 2021 (X-paper)
09:00–12:00

Calculators may be used.

This question paper consists of 6 pages and 1 formula sheet.

211Q1A2116

Copyright reserved

DEPARTMENT OF HIGHER EDUCATION AND TRAINING
REPUBLIC OF SOUTH AFRICA

NATIONAL CERTIFICATE
PLANT OPERATION THEORY N2
TIME: 3 HOURS
MARKS: 100

INSTRUCTIONS AND INFORMATION

1. Answer all the questions.
2. Read all the questions carefully.
3. Number the answers according to the numbering system used in this question paper.
4. Use only a blue or black pen.
5. Write neatly and legibly.

Copyright reserved

QUESTION 1

1.1 Indicate whether the following statements are TRUE or FALSE by writing only 'True' or 'False' next to the question number (1.1.1–1.1.5) in the ANSWER BOOK.

1.1.1 The P-orbital accommodates 2 electrons.

1.1.2 The atomic mass of carbon is 12.

1.1.3 The common name of sodium chloride is table salt.

1.1.4 Valence electrons take part in a chemical reaction.

1.1.5 Non-metals gain an electron to form ions.

(5 × 1) (5)

1.2 Consider the following: $^{39}_{19}K$

1.2.1 Name this element. (1)

1.2.2 Name the period in which this element can be found. (1)

1.2.3 Name TWO physical properties of elements that belong to this group. (2)

1.2.4 Name the product formed when this element reacts with oxygen. (2)

1.2.5 How many valence electrons does this element have? (1)

1.3 Determine the molecular mass of ammonium sulphate $(NH_4)_2SO_4$. (4)

1.4 Describe the test of hydrogen (H_2). (5)

1.5 Give the chemical formula of the following compounds:

1.5.1 Calcium carbonate

1.5.2 Magnesium sulphate

(2 × 2) (4)

[25]

Copyright reserved

QUESTION 2

2.1 Define *Pascal's law* and state an application of it. (5)

2.2 An orifice in a pipe creates a pressure of 25 kPa when the flow is 25 kℓ/min. Determine the differential pressure across the same orifice when the flow is 20 kℓ/min.

Given: $Q = k \times \sqrt{h}$ (4)

2.3 Water in a pipeline flows at a rate of 15 000 ℓ/min at a velocity of 1,5 m/s.

Calculate the diameter of the pipe in mm.

Given: Q = A × V (6)

2.4 Viscosity is the property of a fluid that resists flow.

2.4.1 Name TWO types of viscosity and state the unit of each one.(2 × 2) (4)

2.4.2 Explain the experiment that is used to determine viscosity. (5)

[24]

QUESTION 3

Choose a term from COLUMN B that matches a description in COLUMN A. Write only the letter (A–H) next to the question number (3.1–3.5) in the ANSWER BOOK.

COLUMN A		COLUMN B	
3.1	Anything in a process which is subject to variation and which can be measured and controlled	A	indication element
		B	variable
3.2	Instrument used to measure pressure	C	matter
3.3	Refers to energy quantities per time unit	D	manometer
3.4	It reacts to the change that was detected and transferred	E	thermometer
		F	rate variable
3.5	Mass per unit volume	G	sensory element
		H	density

(5 × 1) **[5]**

QUESTION 4

4.1 Explain the purpose of the rectification section during the distillation process. (7)

4.2 Briefly discuss the general mechanical causes of flooding during fractionation. (6)

4.3 Natural gas and petroleum are used to increase the organic compounds.

Name FIVE components of petroleum. (5)

4.4 Make a sketch and discuss the pressure control in a column where vacuum fractionation is applied. (9)

[27]

QUESTION 5

5.1 The instrument used to measure temperature, is a thermometer.

5.1.1 Name TWO units used to measure temperature. (2)

5.1.2 Describe the units you mentioned in QUESTION 5.1.1. (2 × 2) (4)

5.2 Name the shape of the Bourdon tube used to measure each of the following pressures:

5.2.1 0–700 atmosphere

5.2.2 0–7 atmosphere

5.2.3 0–5 500 atmosphere

(3 × 1) (3)

5.3 The difference in levels of open tubes is 250 mm. The pressure applied is 2,8 kPa.

Calculate the density of the sealing of the liquid.

Given: $P = p \times g \times h$ (3)

Copyright reserved

5.4 Name the parts indicated in the dead-weight tester below. Write only the answer next to the letter (A–G) in the ANSWER BOOK.

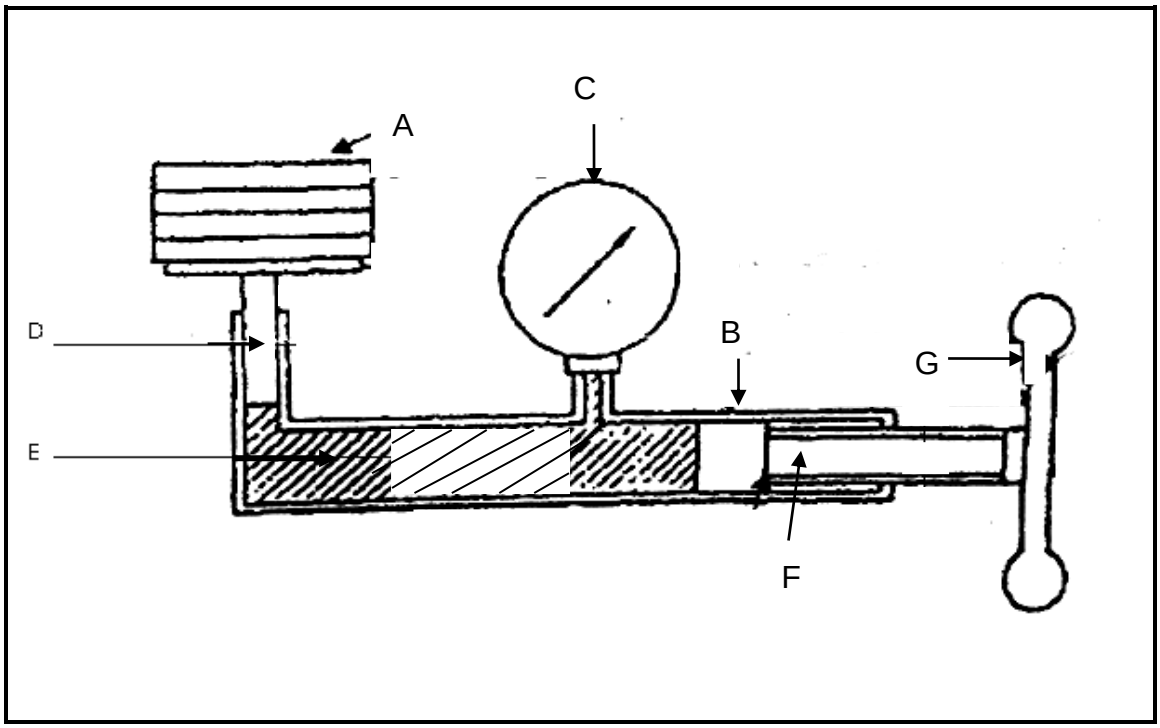

(7)
[19]

TOTAL: 100

Copyright reserved

PLANT OPERATION THEORY N2

FORMULA SHEET

Any applicable formula may be used.

1. $\rho = \frac{p}{gh}$
2. $V = \ell bh$
3. $V = \pi \frac{d^3}{6}$
4. $V = 4\pi \frac{r^3}{3}$
5. $V = x\left(\frac{\pi d^2 h}{12} + V_1\right)$
6. $\Delta P = \rho gh$
7. $V = \pi \frac{d^2}{4} \times h$
8. $\rho = \frac{F}{A}$
9. $A = \pi d^2$
10. $A = \pi \frac{d^2}{4} = \pi r^2$
11. $A = 4\pi r^2$
12. $R = \frac{output}{input} \times 100\%$
13. $\rho_1 gh = \rho_2 gh$
14. $Q = Av = C$
15. $k = \frac{Q}{\sqrt{h}}$
16. $E = \frac{mv^2}{2}$
17. $E = mgh$
18. $V = \pi DN$
19. $V = \frac{a}{t}$
20. $V = \sqrt{2gh}$
21. $PA = mg$
22. $h_{su} = m\{(h_f + gh_{fg}) + C_s(t_{su} - t_s) - (C_w \times t_w)\}$
23. $m = \rho v$
24. $A = \frac{F}{p}$
25. $K = \frac{mv^2}{2}$
26. $K = W/m^2K$
27. $Pv = cT$
28. $m = \frac{Pv}{RT}$
29. $n = \frac{Pv}{R_0 T}$
30. $V = A\ell NnR$
31. $K = \frac{Qx}{A\Delta t}$

Copyright reserved