higher education & training

Department:
Higher Education and Training
REPUBLIC OF SOUTH AFRICA

T1300**(E)**(A8)T

NATIONAL CERTIFICATE

PLANT OPERATION THEORY N2

(11040012)

8 April 2019 (X-Paper)
09:00–12:00

Nonprogrammable calculators may be used.

This question paper consists of 7 pages and 1 formula sheet.

Copyright reserved

DEPARTMENT OF HIGHER EDUCATION AND TRAINING
REPUBLIC OF SOUTH AFRICA

NATIONAL CERTIFICATE
PLANT OPERATION THEORY N2
TIME: 3 HOURS
MARKS: 100

INSTRUCTIONS AND INFORMATION

1. Answer ALL the questions.
2. Read ALL the questions carefully.
3. Number the answers according to the numbering system used in this question paper.
4. Sketches must be large, neat and fully labelled.
5. Write neatly and legibly.

Copyright reserved

QUESTION 1: CHEMISTRY

1.1 Various options are given as possible answers to the following questions. Choose the answer and write only the letter (A–D) next to the question number (1.1.1.–1.1.5) in the ANSWER BOOK.

1.1.1 The atomic number of an element is determined by the number of …

A protons and neutrons.
B protons, neutrons and electrons.
C nucleons.
D protons.

1.1.2 A covalent bonding …

A makes a compound a good conductor of electricity.
B makes a compound soluble.
C is the result of electron sharing.
D forms between metals and nonmetals.

1.1.3 The molecular mass of sodium chloride is …

A 58.
B 61.
C 28.
D 23.

1.1.4 The elements in Group 0 are known as …

A earth metals.
B alkali earth metals.
C halides.
D noble gases.

1.1.5 When an atom forms a positive ion it …

A loses an electron and is reduced.
B gains electrons and is oxidised.
C loses protons and is reduced.
D gains protons and is oxidised.

(5 × 1) (5)

1.2 Define the following terms:

1.2.1 Atom

1.2.2 Element

(2 × 2) (4)

1.3 Draw the structure of 2-chloro-5-methylpentane. (3)

1.4 Calculate the molecular mass of K_2SO_4. (4)

1.5 Choose from the list below all the industrial gasses:

CO; CH_2; H_2; CH_4; NH_3; $C2H_2$; $N3H_3$; H_4; CO_2

(4)

1.6 Explain the term 'organic chemistry'. (2)

1.7 How many pairs of electrons can Carbon share when combined in organic compounds? (1)

1.8 Name TWO examples of hydrocarbons. (2)

[25]

QUESTION 2: ENERGY AND FLUID FLOW

2.1 Define the following:

2.1.1 Latent heat of evaporation

2.1.2 One joule

(2 × 2) (4)

2.2 Water flows at a rate of 20 m^3/min in a pipe with a radius of 190 mm.

Calculate the velocity in m/s.

$Q = A \times V$ (4)

2.3 A pump delivers 250 tons of fresh water at a depth of 6 metres in 60 minutes.

Calculate the following:

2.3.1. Power of the pump in kW (3)

2.3.2 Efficiency of the pump with an input power of 15 kW (2)

2.4 Viscosity is a property of fluid that will resist flow.

Name TWO types of viscosity and the unit used to measure each type.

(2 × 2) (4)

2.5 Determine the differential pressure across an orifice in a pipe when 35 000 litres flows through the pipe per hour. The same orifice creates a pressure of 20 kPa when the flow is 25 000 litres per hour.

Given: $Q = k\ h$ (4)

Copyright reserved

2.6 You tape two different soda straws together end-to-end to make a longer straw with no leaks. The two straws have radii of 3mm and 5mm. You drink water through your combination straw. In which straw is the speed of the liquid the highest? Explain your answer. (4)

[25]

QUESTION 3: DISTILLATION AND FRACTIONATION

3.1 Indicate whether the following statements are TRUE or FALSE. Choose the answer and write only 'True' or 'False' next to the question number (3.1.1–3.1.5) in the ANSWER BOOK.

3.1.1 Evaporation takes place when the movement of the molecules of a liquid increases.

3.1.2 Packed towers are used for a distillation application.

3.1.3 The increase in the vapour rate is due to high temperature and/or too low pressure.

3.1.4 Distillation can be carried out without heat.

3.1.5 The top section of a distillation tower refers to the absorption section.

(5 × 1) (5)

3.2 Describe FOUR aspects that should be considered when temperature control is applied to control the composition of the fractions in the tower. (4 × 2) (8)

3.3 Briefly discuss general mechanical causes of flooding during fractionation. (8)

3.4 Describe the function of the stripping section as part of the distillation column. (4)

[25]

Copyright reserved

QUESTION 4: INSTRUMENTATION

4.1 Choose an item from COLUMN B that matches a description in COLUMN A. Write only the letter (A–F) next to the question number (4.1.1–4.1.5) in the ANSWER BOOK.

COLUMN A		COLUMN B	
4.1.1	Mass per unit volume	A	potential energy
4.1.2	Energy of an object due to its position or state of tension	B	density
4.1.3	Unit that measures heat	C	0 kPa
4.1.4	Atmospheric pressure at sea level	D	101,32 kPa
4.1.5	Refers to the work done per mass	E	joule
		F	power

(5 × 1) (5)

4.2 The diagram below represents a dead-mass tester. Name the parts indicated on the sketch by writing only the answer next to the letter (A–G) in the ANSWER BOOK.

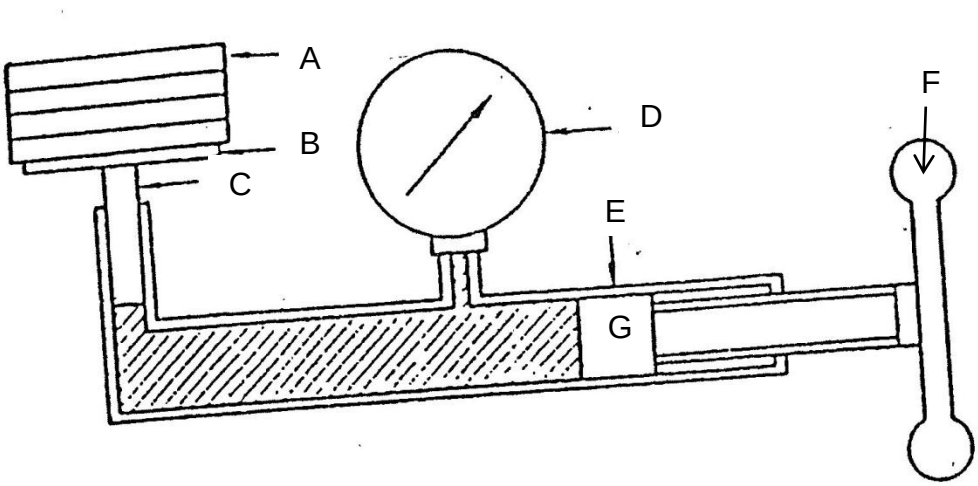

(7)

4.3 The pressure gauge indicates the pressure in the system to be -30 kPa.

Calculate the absolute equivalents of pressure in mmHg, if it is measured at sea level. (3)

4.4 Explain the following variables that can be measured and give an applicable example of each.

4.4.1 Quantity (2)

4.4.2 Quality (2)

4.4.3 Rate (2)

4.5 Convert the following temperatures to Kelvin:

4.5.1 25 °C

4.5.2 5 °C

(2 × 2) (4)

[25]

TOTAL: 100

Copyright reserved

FORMULA SHEET

Any applicable formula may be used.

1. $\rho = \frac{p}{gh}$
2. $V = \ell bh$
3. $V = \pi \frac{d^3}{6}$
4. $V = 4\pi \frac{r^3}{3}$
5. $V = x\left(\frac{\pi d^2 h}{12} + V_1\right)$
6. $\Delta P = \rho gh$
7. $V = \pi \frac{d^2}{4} \times h$
8. $\rho = \frac{F}{A}$
9. $A = \pi d^2$
10. $A = \pi \frac{d^2}{4} = \pi r^2$
11. $A = 4\pi r^2$
12. $R = \frac{output}{input} \times 100\%$
13. $\rho_1 gh = \rho_2 gh$
14. $Q = Av = C$
15. $k = \frac{Q}{\sqrt{h}}$
16. $E = \frac{mv^2}{2}$
17. $E = mgh$
18. $V = \pi DN$
19. $V = \frac{a}{t}$
20. $V = \sqrt{2gh}$
21. $PA = mg$
22. $h_{su} = m\{(h_f + gh_{fg}) + C_s(t_{su} - t_s) - (C_w \times t_w)\}$
23. $m = \rho v$
24. $A = \frac{F}{p}$
25. $K = \frac{mv^2}{2}$
26. $K = W/m^2K$
27. $Pv = cT$
28. $m = \frac{Pv}{RT}$
29. $n = \frac{Pv}{R_0 T}$
30. $V = A\ell NnR$
31. $K = \frac{Qx}{A\Delta t}$

Copyright reserved