higher education & training

Department:
Higher Education and Training
REPUBLIC OF SOUTH AFRICA

NATIONAL CERTIFICATE:
MULTIDISCIPLINARY DRAWING OFFICE PRACTICE

PICTORIAL DRAUGHTING

(8060214)

22 November 2019 (X-Paper)
09:00–13:00

CLOSED-BOOK EXAMINATION

REQUIREMENTS: ONE A2 drawing sheet
ONE A4 draughting film or gateway tracing paper

This question paper consists of 4 pages, 5 diagram sheets and 1 formula sheet.

Copyright reserved

DEPARTMENT OF HIGHER EDUCATION AND TRAINING
REPUBLIC OF SOUTH AFRICA

NATIONAL CERTIFICATE:
MULTIDISCIPLINARY DRAWING OFFICE PRACTICE
PICTORIAL DRAUGHTING
TIME: 4 HOURS
MARKS: 100

INSTRUCTIONS AND INFORMATION

1. Answer ALL the questions.
2. Read ALL the questions carefully.
3. Number the answers according to the numbering system used in this question paper.
4. Use both sides of the A2 DRAWING SHEET and answer QUESTION 1, 2 and 3 on the front of the DRAWING SHEET, QUESTION 4 and QUESTION 5 on the reverse of the A2 DRAWING SHEET and QUESTION 6 on the A4 DRAUGHTING FILM.
5. Draw a 15 mm border around the A2 DRAWING SHEET on both sides.
6. Cleary indicate QUESTION NUMBERS.
7. Complete ALL drawing work, including candidate information, in pencil on the A2 DRAWING SHEET and in draughting ink on the A4 DRAUGHTING FILM.
8. ALL drawing work must comply with the SABS 0111-1990 Code of Practice.
9. On completion, fold the A2 DRAWING SHEET to A3-size with the EXAMINATION NUMBER visible on the front. The A4 DRAUGHTING FILM must be placed inside the folded A2 DRAWING SHEET. Do NOT use staples.
10. Use your discretion for dimensions NOT given.
11. Use a 3 mm fillet radius for ALL radii NOT given.
12. A balanced layout is very important and candidates will be penalised for poor planning.
13. Work neatly.

Copyright reserved

QUESTION 1: FREEHAND DRAWING

FIGURE 1, DIAGRAM SHEET 1 (attached), shows two views of a casting link in first-angle orthographic projection.

Draw freehand, to scale 1:1, the front and half-sectional left views of the given casting link on cutting plane A-A with the top half in section. Show hidden details only in the left view portion and NOT in the section. Add any THREE dimensions to the completed drawing together with a suitable title and scale as well as the projection symbol for first-angle orthographic projection. **[14]**

QUESTION 2: TWO-POINT PERSPECTIVE DRAWING

FIGURE 2, DIAGRAM SHEET 2 (attached), shows two views of a solid-base bracket in first-angle orthographic projection.

Draw, to scale 1:1, a perspective drawing in two-point perspective of the base bracket. Point A is situated on the ground line (GL) up against the picture plane (PP) and in line with the centre of vision (CV). Line AB vanishes to the right at 45°. The distance of the eye in front of the picture plane (PP) is 130 mm and the height of the eye above the ground line (GL) is 100 mm. (16)

Show ALL necessary points on the construction, for example CV, VPs, etc. (4)
[20]

QUESTION 3: ISOMETRIC PROJECTION

FIGURE 3, DIAGRAM SHEET 3 (attached), shows TWO views of a geometrical block in first-angle orthographic projection.

Do NOT copy the given views, but construct a suitable isometric scale. (2)

Draw an isometric projection of the geometrical block. Only show hidden detail of the hole through the block. Do NOT insert any dimensions. (18)
[20]

Copyright reserved

QUESTION 4: GEAR-TEETH CONSTRUCTION

FIGURE 4, DIAGRAM SHEET 4 (attached), shows a pictorial view of a gear and pinion in mesh that are both made of mild steel.

Do NOT copy the given drawing, but draw, to scale 1:1, an outside left view as shown in the direction of arrow A to show THREE complete teeth of the gear to mesh with TWO complete teeth of the pinion, constructed according to an approximate method. The drawing must be shown in a vertical position in mesh. (10)

Show ALL construction lines and calculations on the completed drawing. (4)
[14]

QUESTION 5: SQUARE-THREAD CONSTRUCTION

FIGURE 5, DIAGRAM SHEET 5 (attached), shows a full-sectional front view of the assembly of a machine vice.

Do NOT copy the given drawing, but draw, to scale 5:1 and in a vertical position, a detail of the thread of the machine vice to show the true form of the thread with TWO right-hand turns of the square thread according to the specifications provided on the drawing. Show ALL construction lines on the drawing. Do NOT show any hidden detail or calculations. **[14]**

QUESTION 6: INK DRAWING

FIGURE 5, DIAGRAM SHEET 5 (attached), shows a full-sectional front view of the assembly of a machine vice.

Draw, with ink pens and to scale 1:1, a full-sectional front view of the machine-vice assembly. Insert FOUR linear dimensions on the completed drawing. The square thread may be drawn according to the conventional method to illustrate the thread in the vice. Do NOT show any hidden detail. Use your discretion for dimensions NOT given. **[18]**

TOTAL: 100

Copyright reserved

DIAGRAM SHEET 1: FREEHAND DRAWING

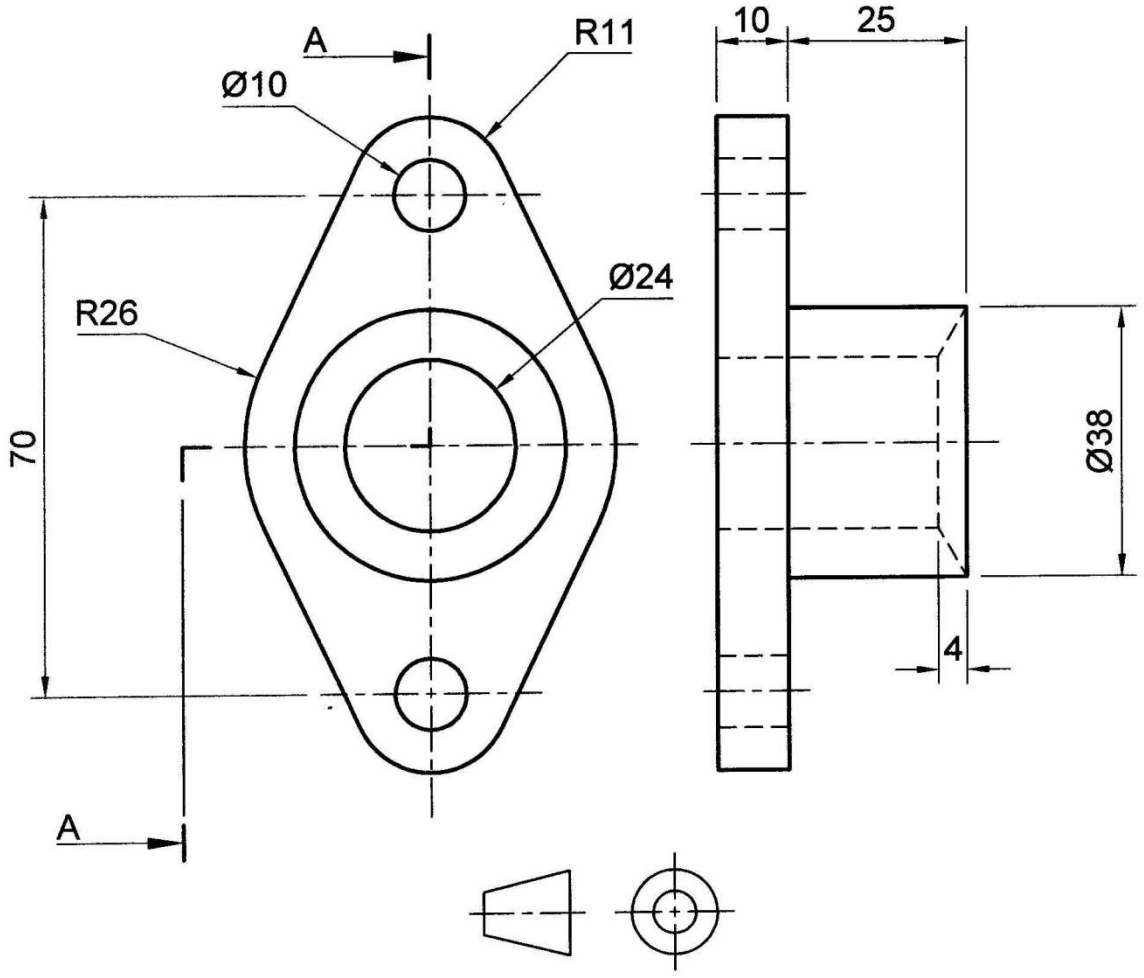

FIGURE 1

Copyright reserved

DIAGRAM SHEET 2: TWO-POINT PERSPECTIVE DRAWING

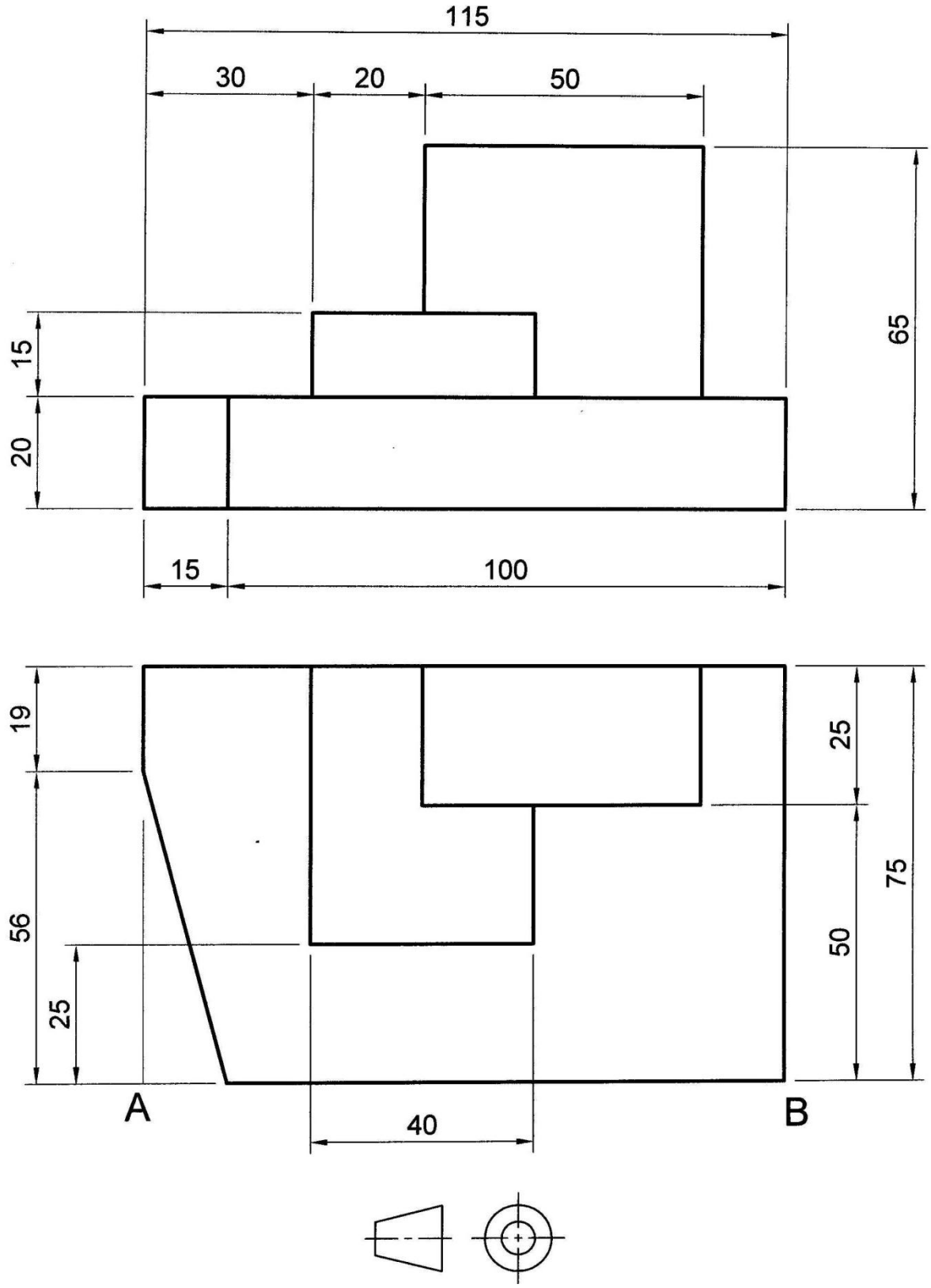

FIGURE 2

DIAGRAM SHEET 3: ISOMETRIC PROJECTION

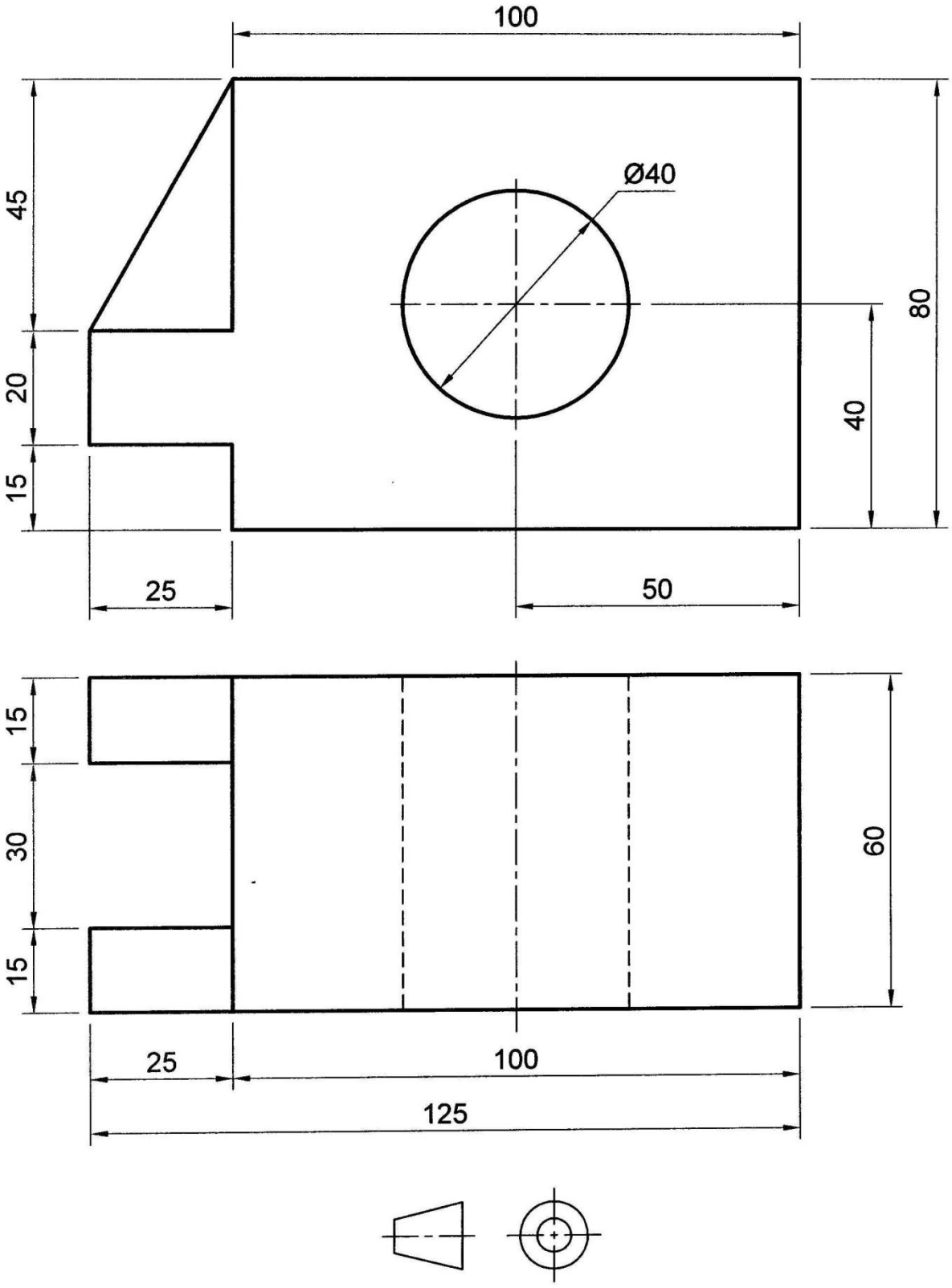

FIGURE 3

DIAGRAM SHEET 4: GEAR-TEETH CONSTRUCTION

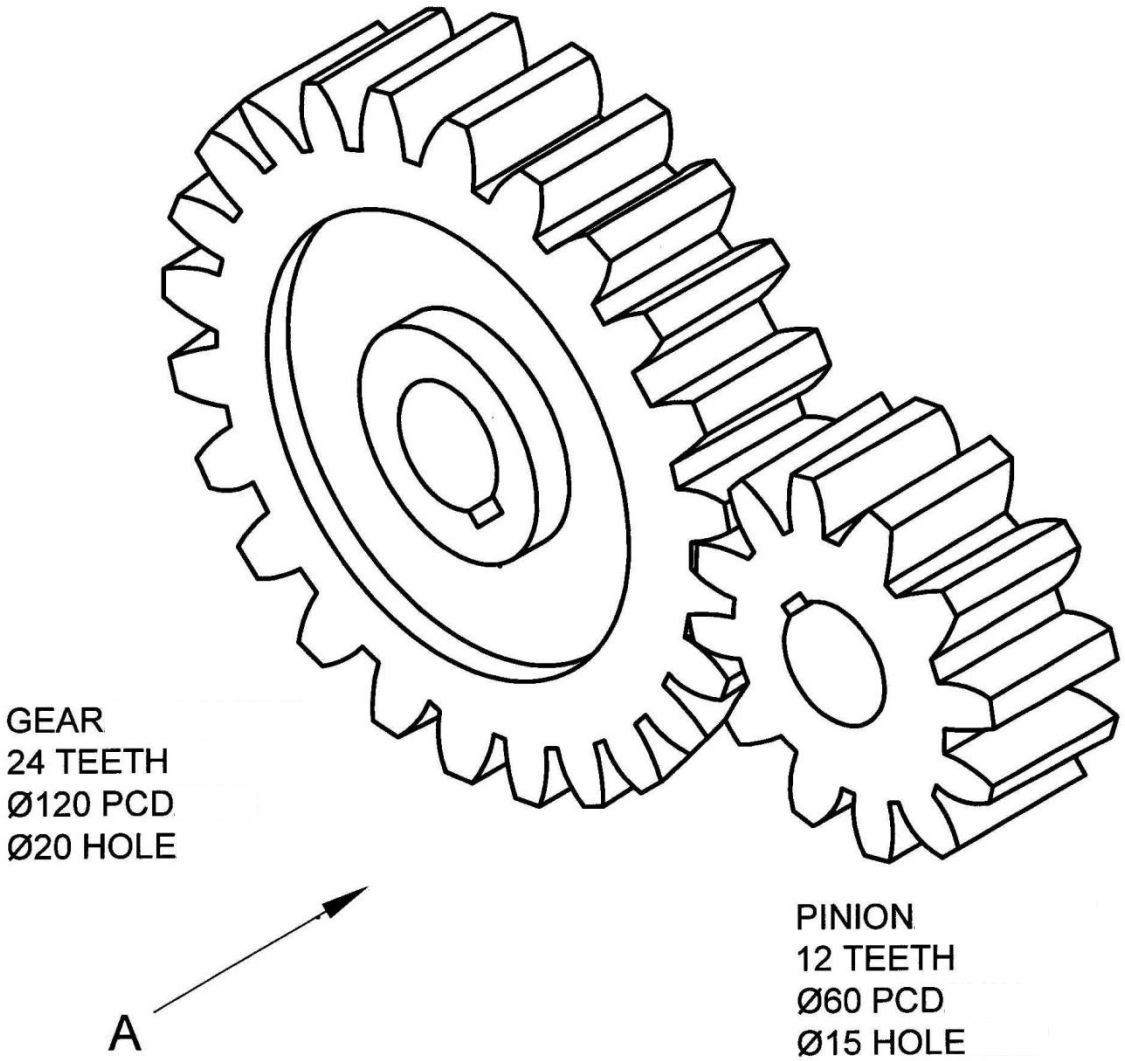

FIGURE 4

DIAGRAM SHEET 5: SQUARE-THREAD CONSTRUCTION

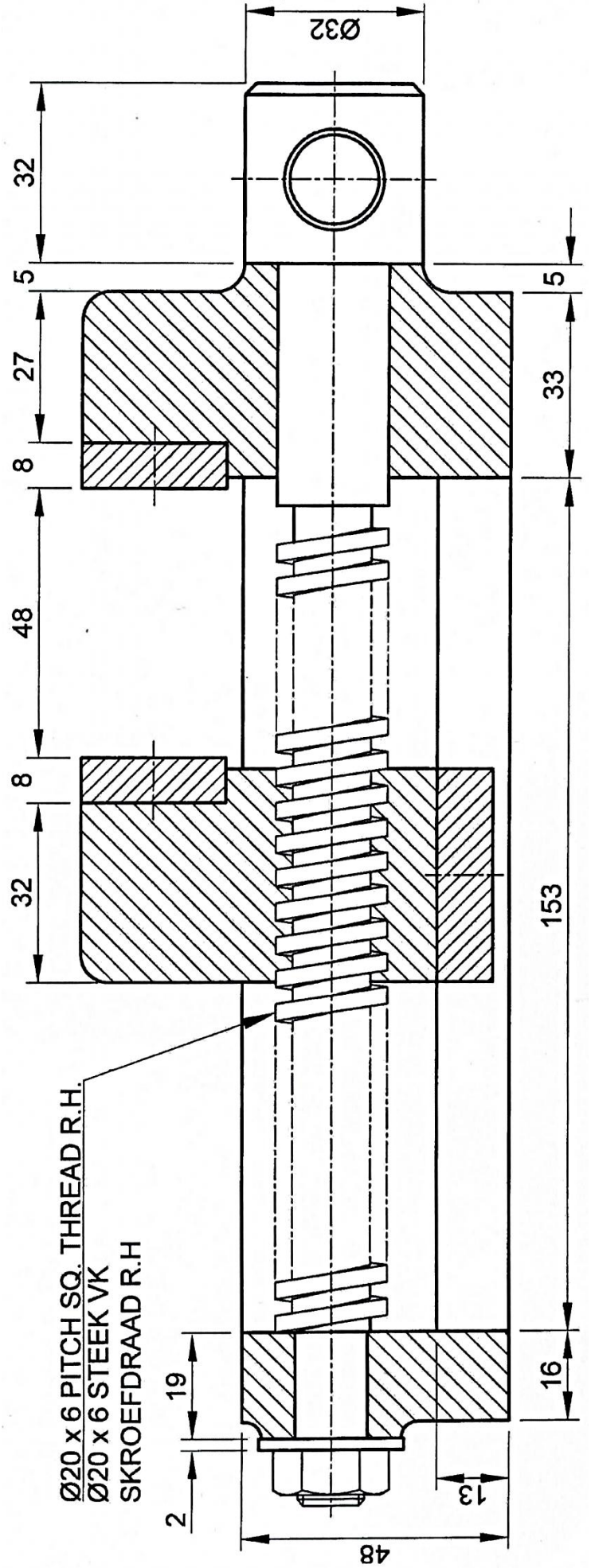

Copyright reserved

FIGURE 5

FORMULA SHEET

1. SCREW-THREAD CONSTRUCTION

Length = (pitch × number of turns) + pitch/2

Pitch divisions = pitch/12

2. GEAR-TEETH CONSTRUCTION

Module = addendum

Dedendum = 1,25 × module

PCD = module × number of teeth

Fillet radius = 0,3 × module

Circular pitch = 3,142 × module

3. SQUARE-SPRING CONSTRUCTION

Length = (lead × number of turns) + material thickness

Copyright reserved