higher education & training

Department:
Higher Education and Training
REPUBLIC OF SOUTH AFRICA

MARKING GUIDELINE

NATIONAL CERTIFICATE:
MULTIDISCIPLINARY DRAWING OFFICE PRACTICE

PICTORIAL DRAUGHTING

22 NOVEMBER 2019

This marking guideline consists of 7 pages.

Copyright reserved

QUESTION 1: FREEHAND DRAWING

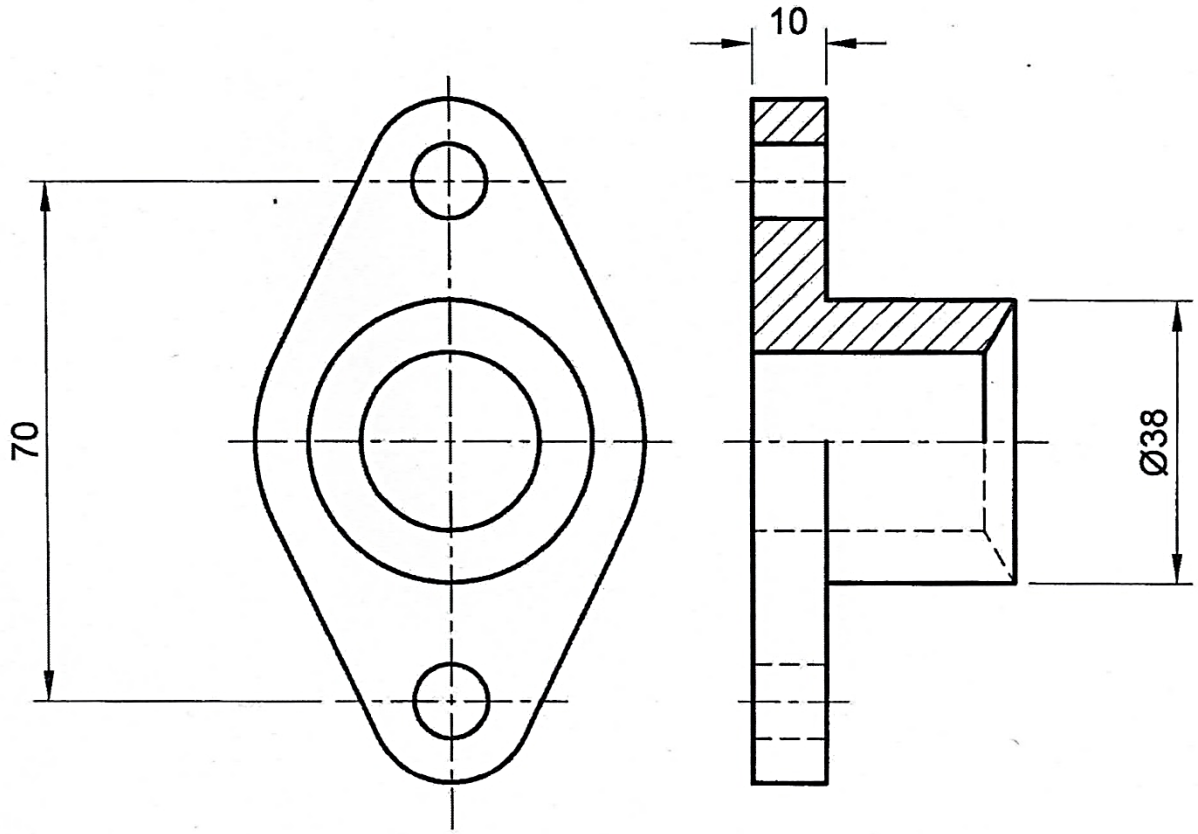

LINK
SCALE 1:1

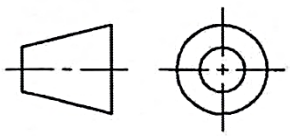

PROPORTION/PROPORSIE	= 7%
LINEWORK/LYNWERK	= 4%
ACCURACY/AKKURAATHEID	= 2%
BALANCE LAYOUT/NEATNESS GEBALANSEERDE UITLEG/NETHEID	= 1%
TOTAL	= 14%

[14]

Copyright reserved

QUESTION 2: TWO-POINT PERSPECTIVE DRAWING

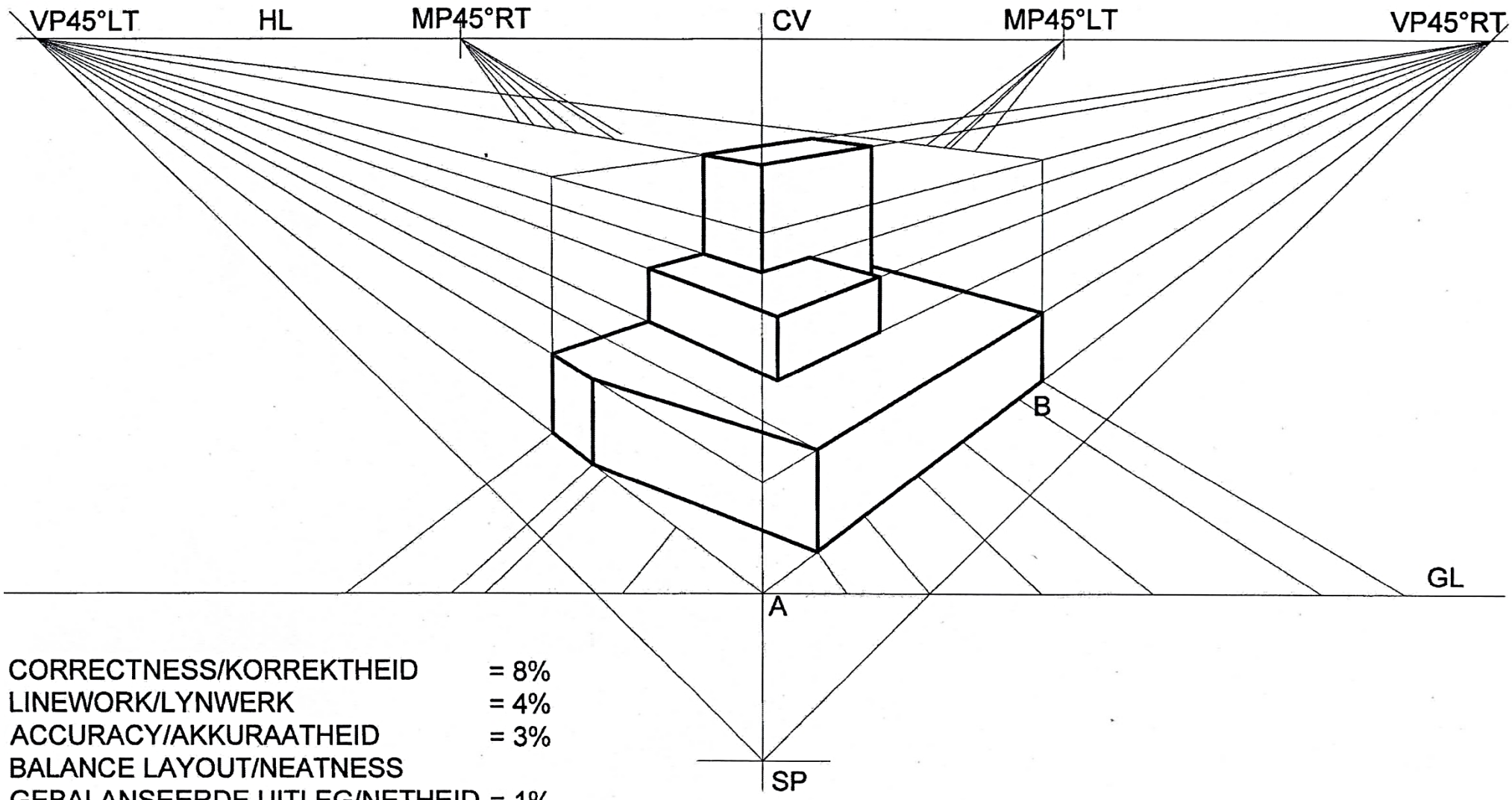

CORRECTNESS/KORREKTHEID	= 8%
LINEWORK/LYNWERK	= 4%
ACCURACY/AKKURAATHEID	= 3%
BALANCE LAYOUT/NEATNESS	
GEBALANSEERDE UITLEG/NETHEID	= 1%
TERMINOLOGY/TERMINOLOGIE	= 4%
TOTAL	= 20%

[20]

Copyright reserved

QUESTION 3: ISOMETRIC PROJECTION

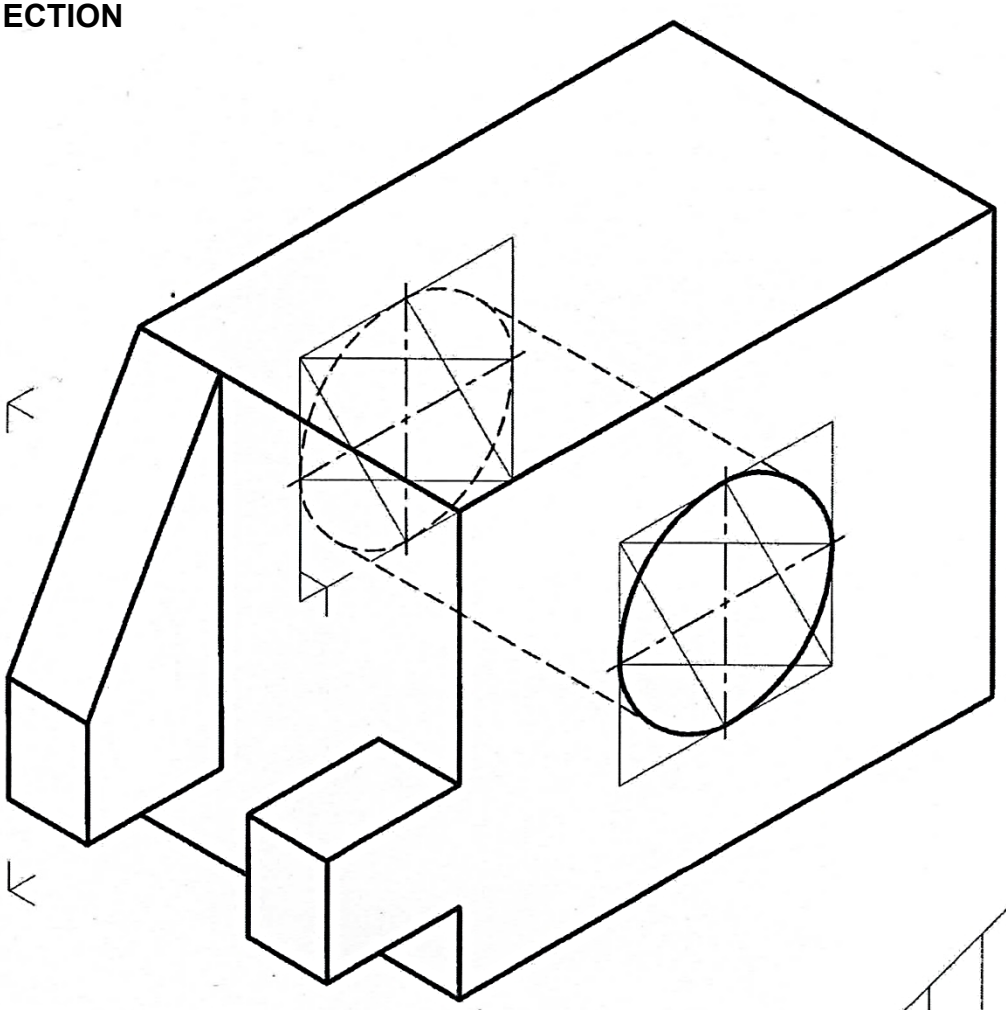

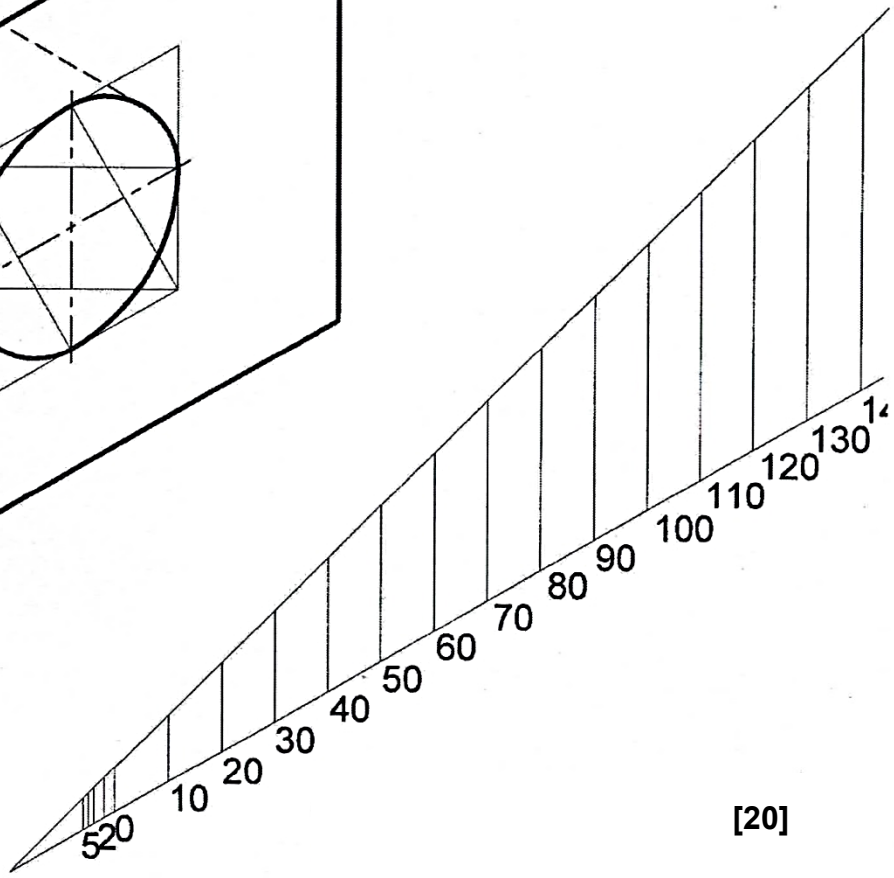

CORRECTNESS/KORREKTHEID	= 10%
LINEWORK/LYNWERK	= 5%
ACCURACY/AKKURAATHEID	= 3%
BALANCE LAYOUT/NEATNESS GEBALANSEERDE UITLEG/NETHEID	= 2%
TOTAL	= 20%

[20]

Copyright reserved

QUESTION 4: GEAR-TEETH CONSTRUCTION

MOD = P.C.D./24
= 120/24
= 5

C.P. = 3,142 X M
= 3,142 X 5
= 15.71

TT = 15.71/2
= 7.855

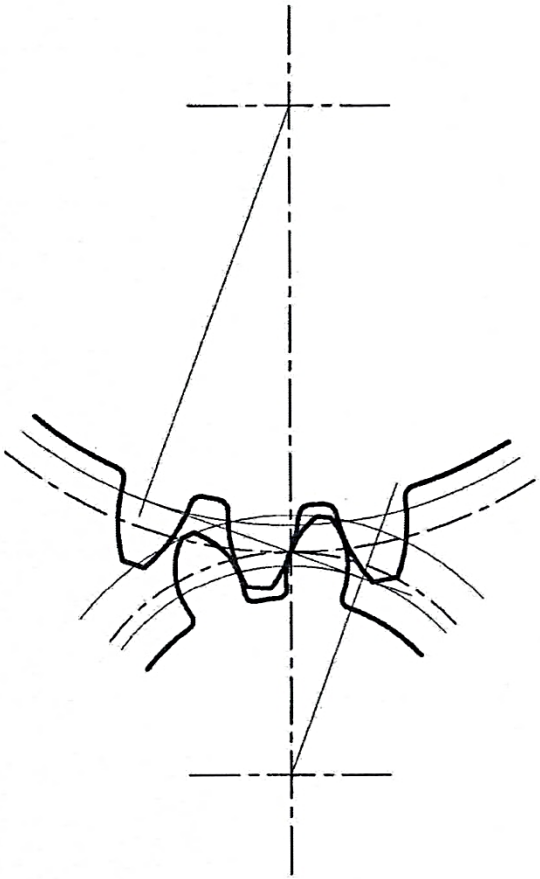

CORRECTNESS/KORREKTHEID	= 5%
LINEWORK/LYNWERK	= 2,5%
ACCURACY/AKKURAATHEID	= 1,5%
BALANCE LAYOUT/NEATNESS	
GEBALANSEERDE UITLEG/NETHEID	= 1%
CONSTR.& CALC./KONSTR.& BEREK.	= 4%
TOTAL	= 14%

[14]

Copyright reserved

QUESTION 5: SQUARE-THREAD CONSTRUCTION

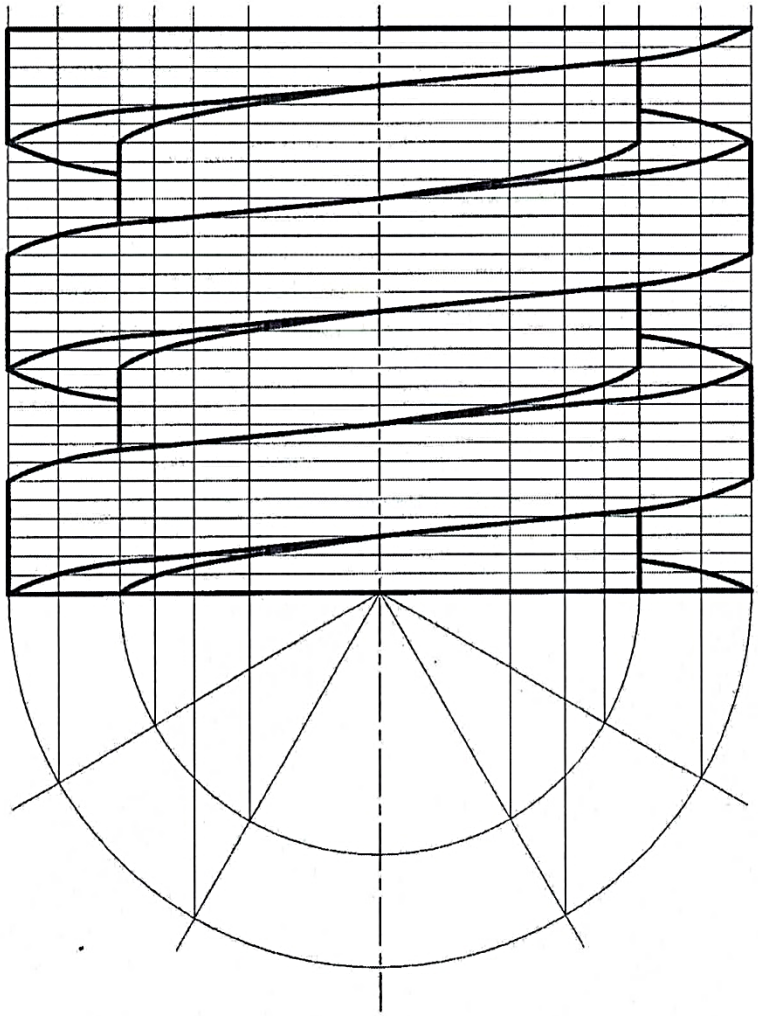

CORRECTNESS/KORREKTHEID	= 7%
LINEWORK/LYNWERK	= 4%
ACCURACY/AKKURAATHEID	= 2%
BALANCE LAYOUT/NEATNESS GEBALANSEERDE UITLEG/NETHEID	= 1%
TOTAL	= 14%

[14]

QUESTION 6: INK DRAWING

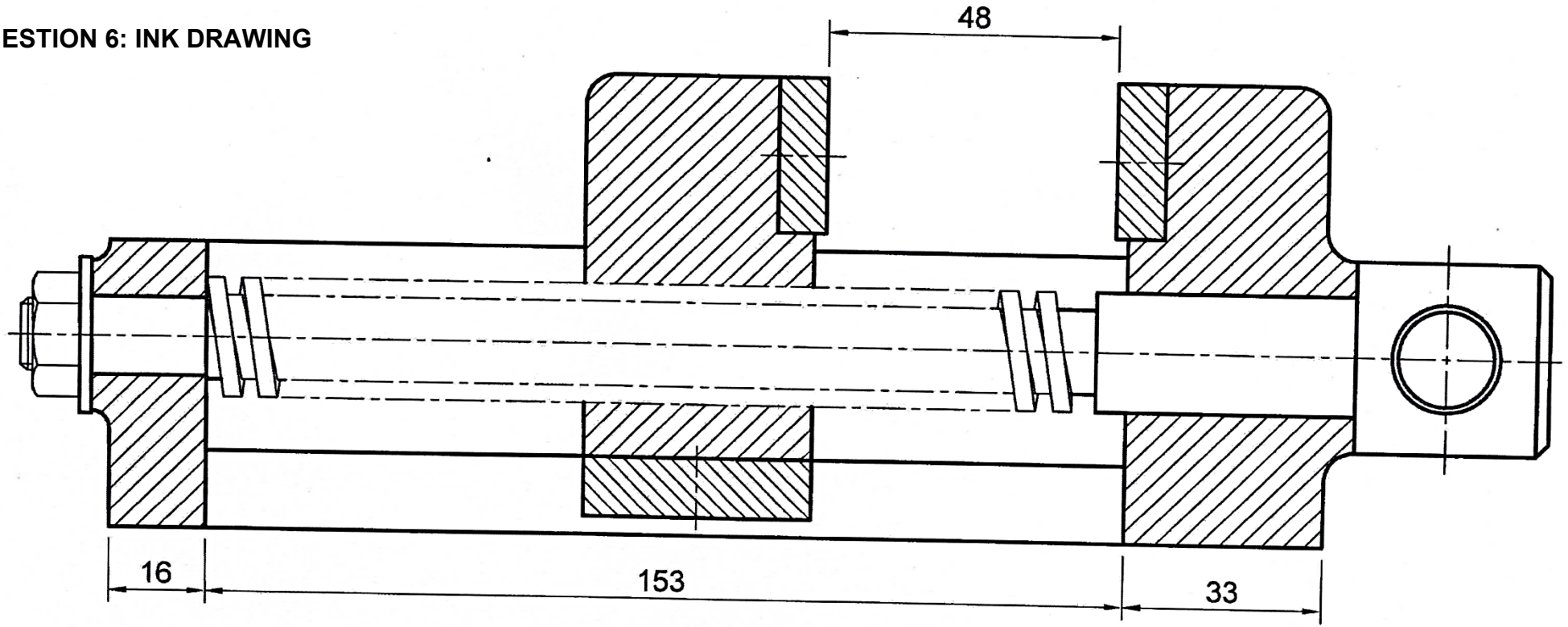

MACHINE VICE
SCALE1:1

CORRECTNESS/KORREKTHEID	= 9%
LINEWORK/LYNWERK	= 4%
ACCURACY/AKKURAATHEID	= 3%
BALANCE LAYOUT/NEATNESS GEBALANSEERDE UITLEG/NETHEID	= 2%
TOTAL	= 18%

[18]

TOTAL: 100

Copyright reserved