higher education & training

Department:
Higher Education and Training
REPUBLIC OF SOUTH AFRICA

T1280**(E)**(A2)T

NATIONAL CERTIFICATE:
MULTIDISCIPLINARY DRAWING OFFICE PRACTICE

PICTORIAL DRAUGHTING

(8090214)

2 August 2019 (X-Paper)
09:00–13:00

CLOSED-BOOK EXAMINATION

REQUIREMENTS: **ONE A4 draughting film or gateway tracing paper**
ONE A2 drawing sheet

This question paper consists of 4 pages, 5 diagram sheets and 1 formula sheet.

Copyright reserved

DEPARTMENT OF HIGHER EDUCATION AND TRAINING
REPUBLIC OF SOUTH AFRICA

NATIONAL CERTIFICATE:
MULTIDISCIPLINARY DRAWING OFFICE PRACTICE
PICTORIAL DRAUGHTING
TIME: 4 HOURS
MARKS: 100

INSTRUCTIONS AND INFORMATION

1. Answer ALL the questions.
2. Read ALL the questions carefully.
3. Use both sides of the DRAWING SHEET and answer QUESTIONS 1, 2 and 3 on the front of the A2 DRAWING SHEET, QUESTIONS 4 and 5 on the reverse of the A2 DRAWING SHEET and QUESTION 6 on the DRAUGHTING FILM supplied.
4. Draw a 15 mm border around the DRAWING SHEET (on both sides).
5. Clearly indicate question numbers.
6. Complete ALL drawing work, including candidate information, in pencil on the A2 DRAWING SHEET and in draughting ink on the A4 DRAUGHTING FILM.
7. ALL drawing work must comply with the SABS 0111-1990 Code of Practice.
8. On completion, fold the A2 DRAWING SHEET to A3 size with the EXAMINATION NUMBER visible on the front. The DRAUGHTING FILM must be placed inside the folded A2 DRAWING SHEET. Do NOT use staples.
9. Use your discretion for dimensions NOT given.
10. Use a 3 mm fillet radius for ALL radii NOT given.
11. A balanced layout is very important and candidates will be penalised for poor planning.
12. Work neatly.

Copyright reserved

QUESTION 1: FREEHAND DRAWING

FIGURE 1, DIAGRAM SHEET 1 (attached), shows an isometric view of a machined component.

Make a neat freehand drawing, to scale 1:1, of the following views of the component in first-angle orthographic projection:

1.1 A front view in the direction of arrow A

1.2 A left view in the direction of arrow B

Do NOT show any hidden detail. Add TWO dimensions in both views, totalling FOUR dimensions for the completed drawing. **[14]**

QUESTION 2: TWO-POINT PERSPECTIVE DRAWING

FIGURE 2, DIAGRAM SHEET 2 (attached), shows two views of a guide block in third-angle orthographic projection.

Draw, to scale 1:1 and by using the measure-point method, a two-point perspective drawing of the guide block. Point A is situated on the ground line (GL) in line with the centre of vision (CV) and up against the picture plane (PP). Line AB vanishes to the left at 45°. The distance of the eye in front of the picture plane (PP) is 130 mm and the height of the eye above the ground line (GL) is 100 mm. Show ALL hidden details in the completed drawing. (16)

Show ALL necessary points on the construction, for example VC, VPs, etc. (4)
[20]

QUESTION 3: ISOMETRIC PROJECTION

FIGURE 3, DIAGRAM SHEET 3 (attached), shows two views of a support block in first-angle orthographic projection.

Do NOT copy the given views, but construct a suitable isometric scale. (2)

Draw an isometric projection of the support block. Only show hidden detail of the hole through the top section. Do NOT insert any dimensions. (18)
[20]

Copyright reserved

QUESTION 4: SQUARE-SPRING CONSTRUCTION

Draw, to scale 1:1, TWO full left-handed turns of a helical spring with the following details:

- The square spring must be drawn in a vertical position with the sectional portion at the lower left-hand side of the completed drawing.
- The outside diameter is 110 mm.
- The lead is 48 mm.
- The bar size is 16 mm square.

Show ALL construction lines on the drawing. Do NOT show any hidden detail or calculations. **[14]**

QUESTION 5: GEAR-TEETH CONSTRUCTION

FIGURE 4, DIAGRAM SHEET 4 (attached), shows a pictorial view of a gear and pinion in mesh both made of mild steel.

Do NOT copy the given drawing, but draw, to scale 1:1, an outside left view as shown in the direction of the arrow marked A to show THREE complete teeth of only the gear constructed according to an approximate method. The remainder of the gear must be drawn according to conventional representation and the keyway must be drawn using empirical values. (10)

HINT: Use D/4 and D/12 to obtain the keyway size.

Show ALL construction lines, calculations and keyway part on the DRAWING SHEET. (4)
[14]

QUESTION 6: INK DRAWING

FIGURE 5, DIAGRAM SHEET 5 (attached), shows a full-sectional front view of a hopper latch.

Draw, with ink pens, to scale 1:1, the full-sectional view of the hopper latch. Print or stencil a suitable title and scale centred beneath the layout and insert any TWO dimensions. Use your discretion for any dimensions NOT shown. **[18]**

TOTAL: 100

Copyright reserved

DIAGRAM SHEET 1

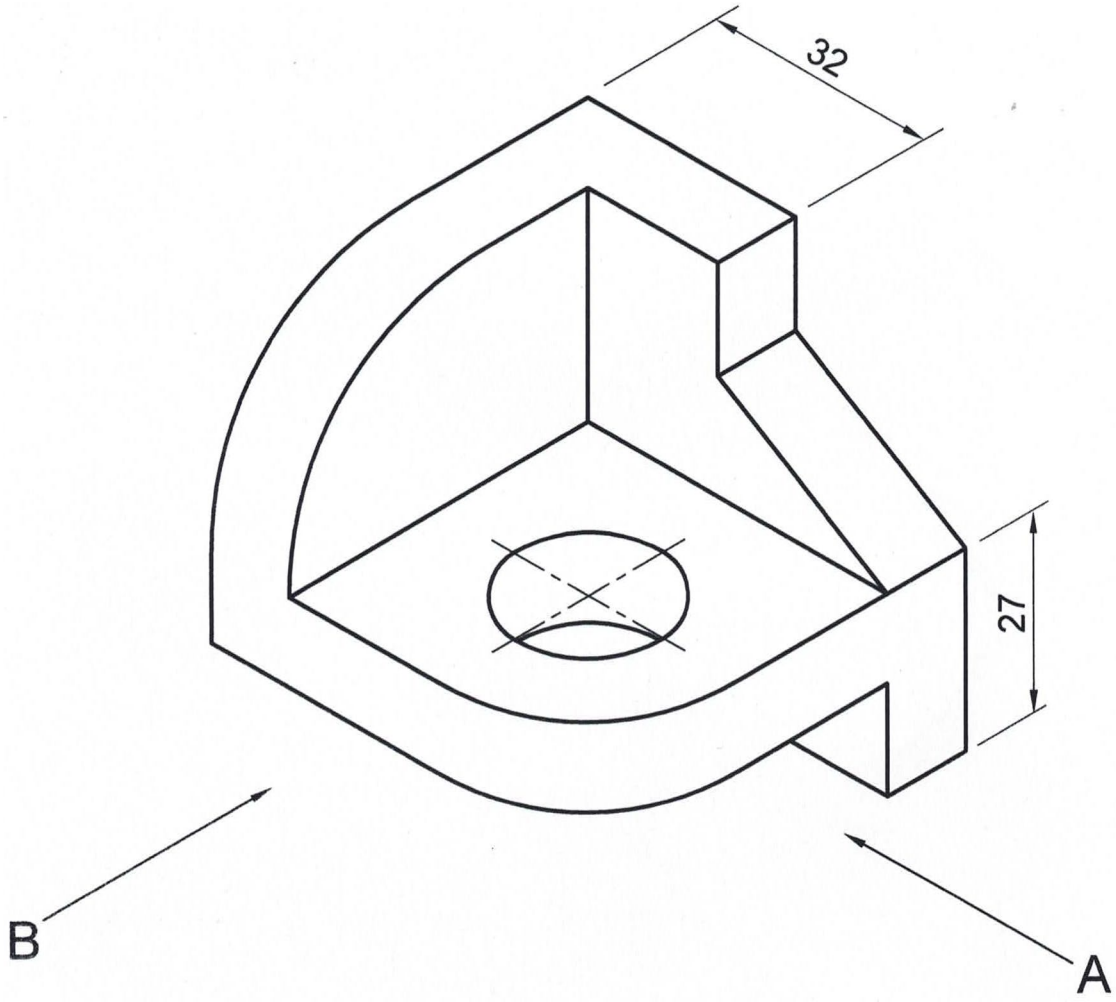

FIGURE 1

Copyright reserved

DIAGRAM SHEET 2

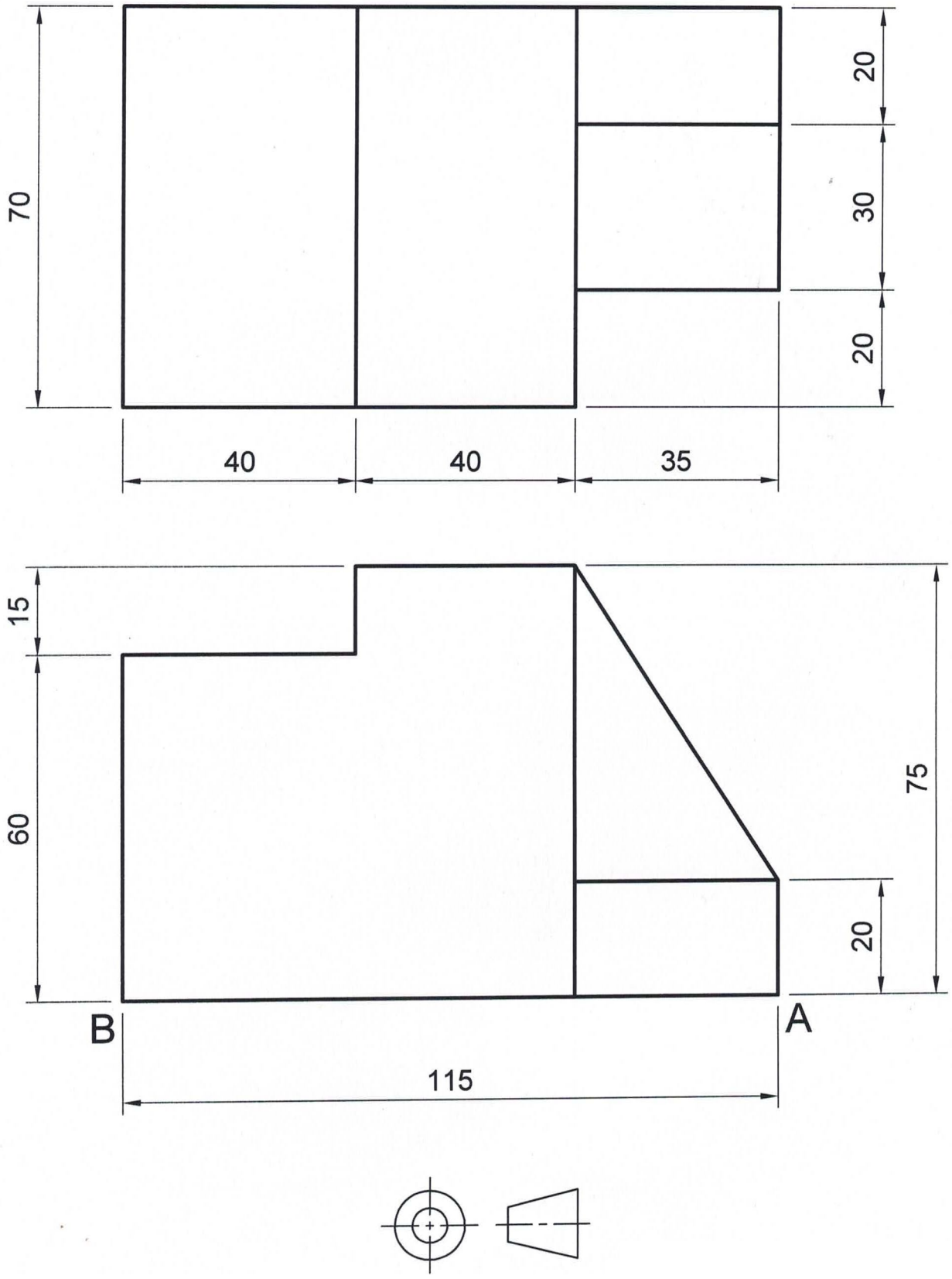

FIGURE 2

DIAGRAM SHEET 3

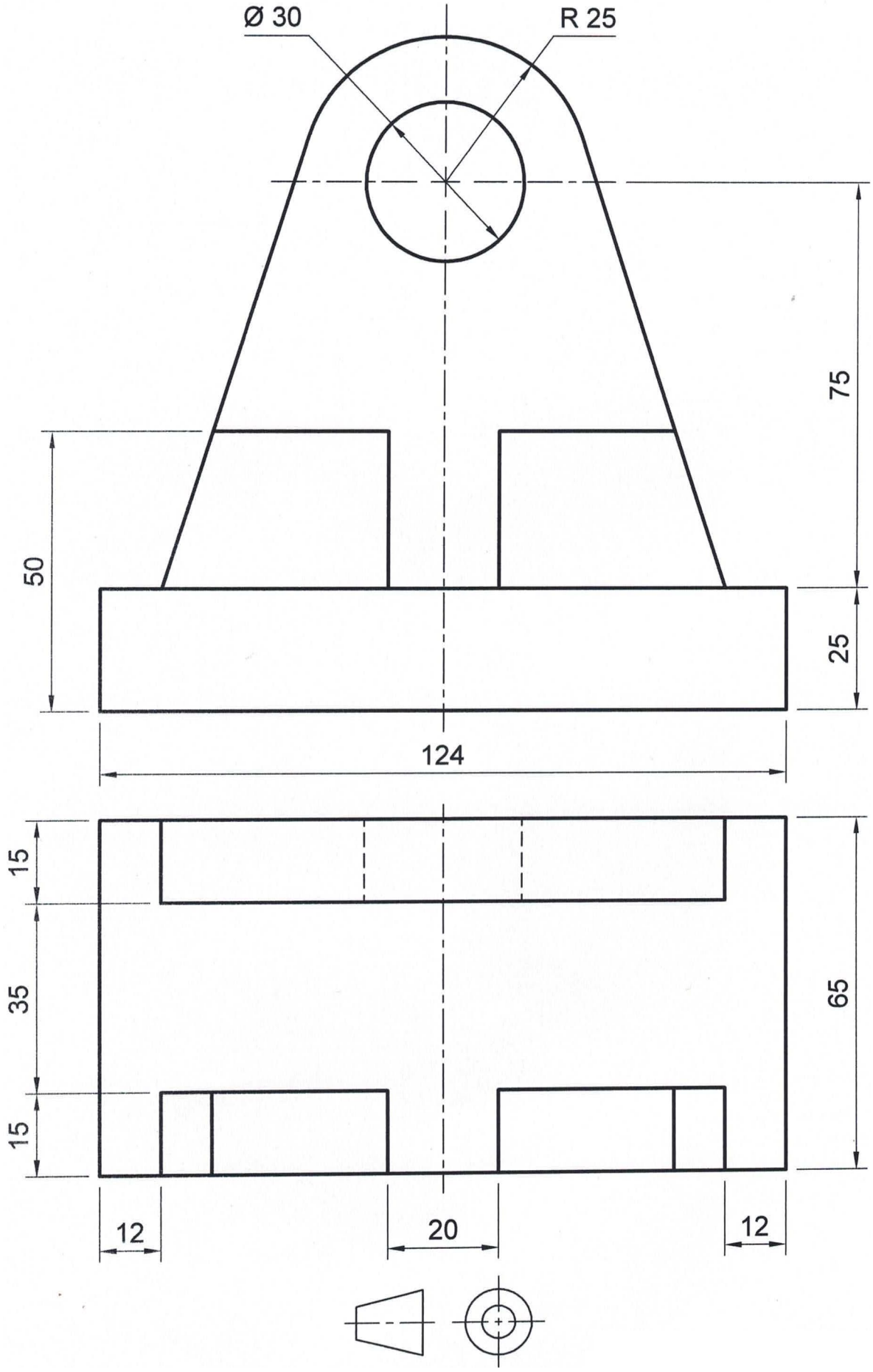

FIGURE 3

Copyright reserved

DIAGRAM SHEET 4

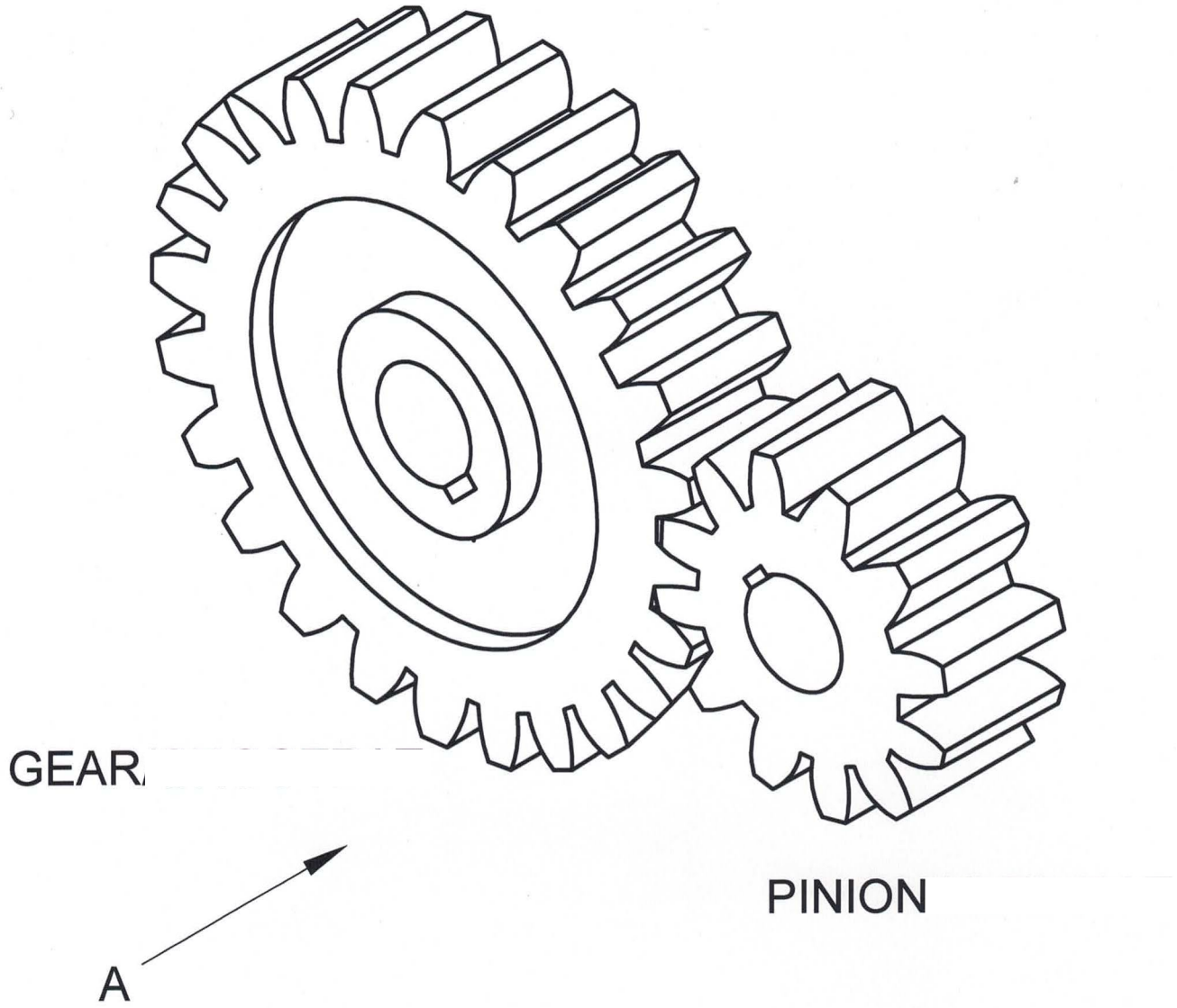

GEAR/GROOTRAT
NO. OF TEETH/GETAL TANDE = 24
PCD/SSD = Ø120mm
HOLE/GAT = Ø20mm
DRAW TO SCALE 1:1

FIGURE 4

Copyright reserved

DIAGRAM SHEET 5

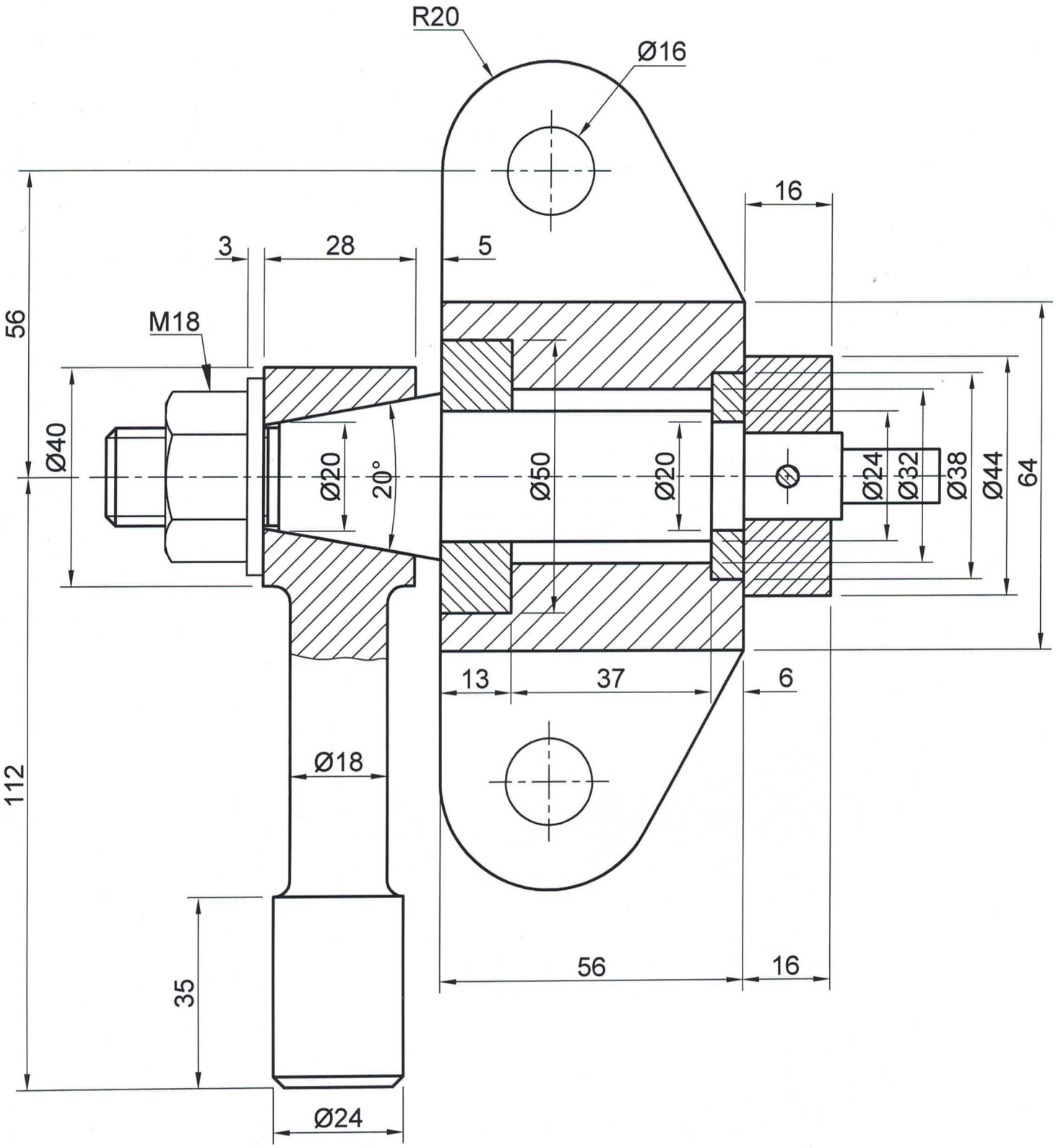

FIGURE 5

Copyright reserved

FORMULA SHEET

1. **Screw-thread construction**

   Length = (pitch × number of turns) + pitch/2

   Pitch divisions = pitch/12

2. **Gear-teeth construction**

   Module = addendum

   Dedendum = 1,25 × module

   PCD = module × number of teeth

   Fillet radius = 0,3 × module

   Circular pitch = 3,142 × module

3. **Square-spring construction**

   Length = (lead × number of turns) + material thickness

Copyright reserved