higher education & training

Department:
Higher Education and Training
REPUBLIC OF SOUTH AFRICA

MARKING GUIDELINE

NATIONAL CERTIFICATE:
MULTIDISCIPLINARY DRAWING OFFICE PRACTICE

PICTORIAL DRAUGHTING

2 AUGUST 2019

This marking guideline consists of 7 pages.

Copyright reserved

QUESTION 1: FREEHAND DRAWING

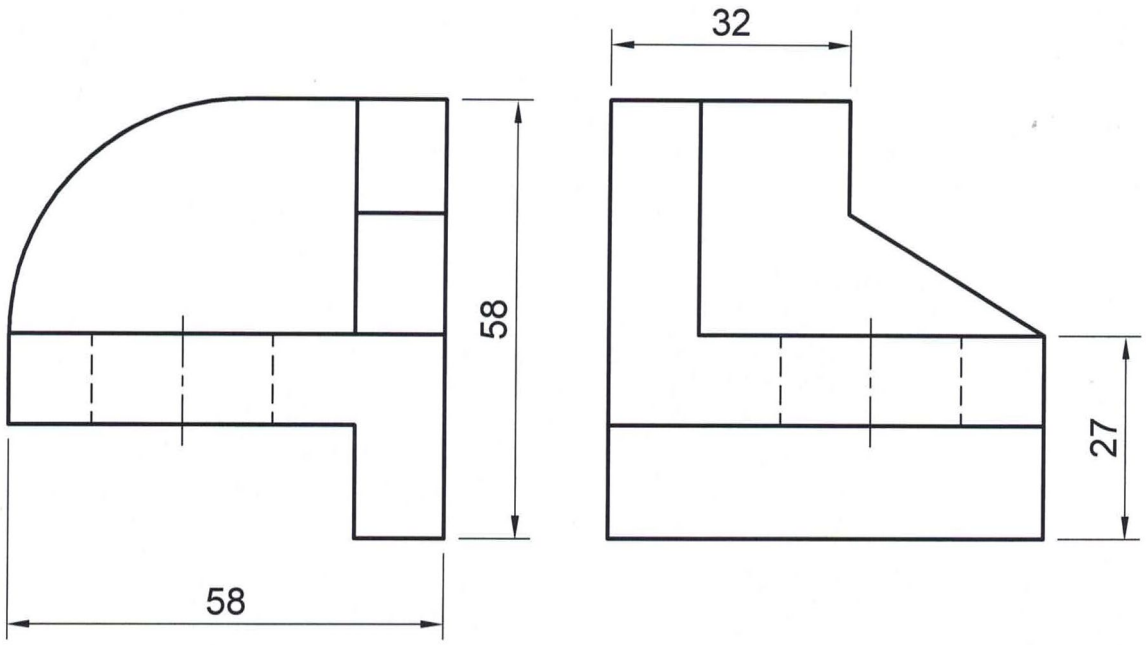

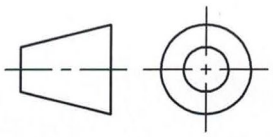

Proportion	=	7%
Line work	=	4%
Accuracy	=	2%
Balance layout/neatness	=	1%

[14]

QUESTION 2: TWO-POINT PERSPECTIVE DRAWING

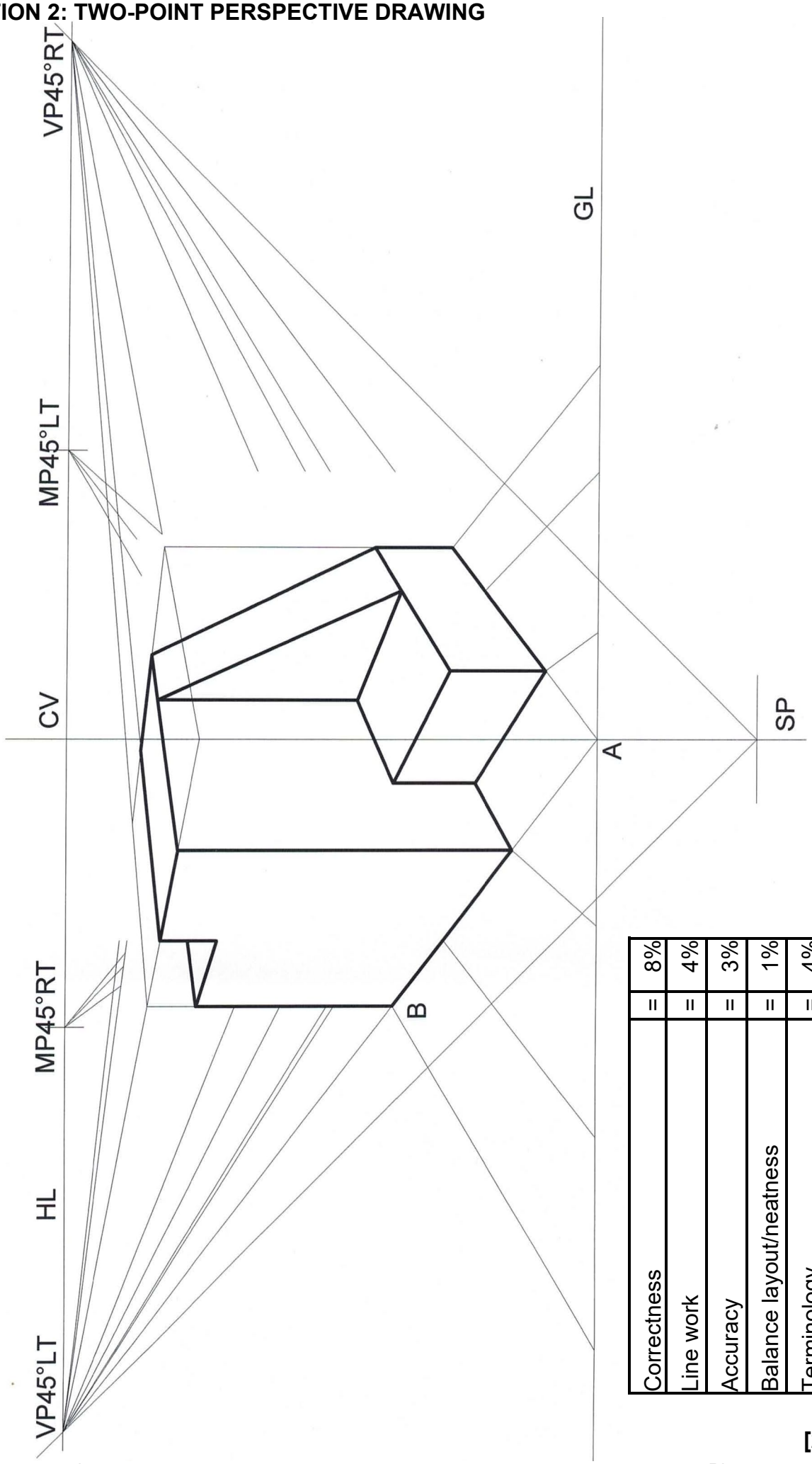

Correctness	=	8%
Line work	=	4%
Accuracy	=	3%
Balance layout/neatness	=	1%
Terminology	=	4%

[20]

QUESTION 3: ISOMETRIC PROJECTION

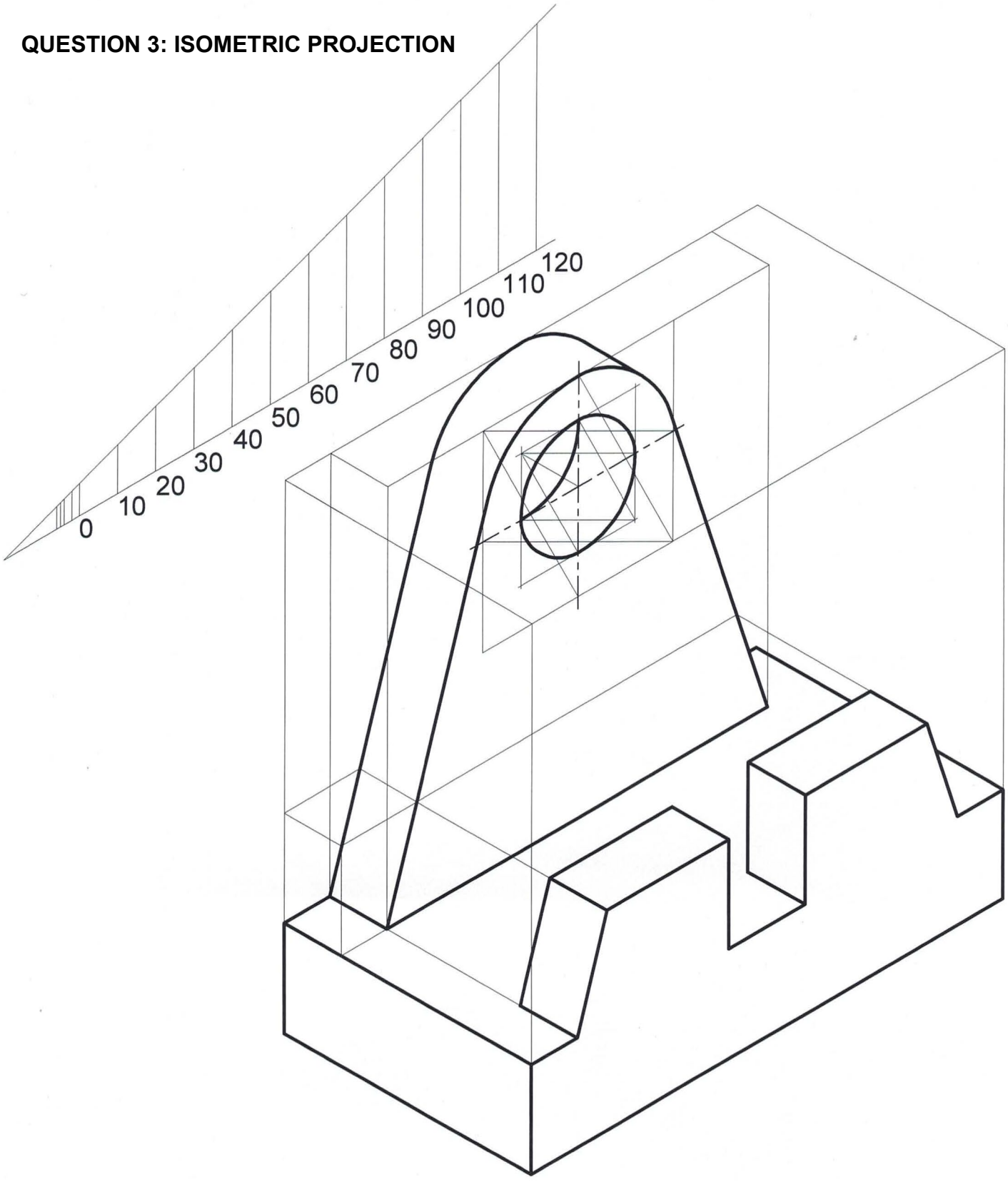

Correctness	=	10%
Line work	=	5%
Accuracy	=	3%
Balance layout/neatness	=	2%

[20]

Copyright reserved

QUESTION 4: SQUARE-SPRING CONSTRUCTION

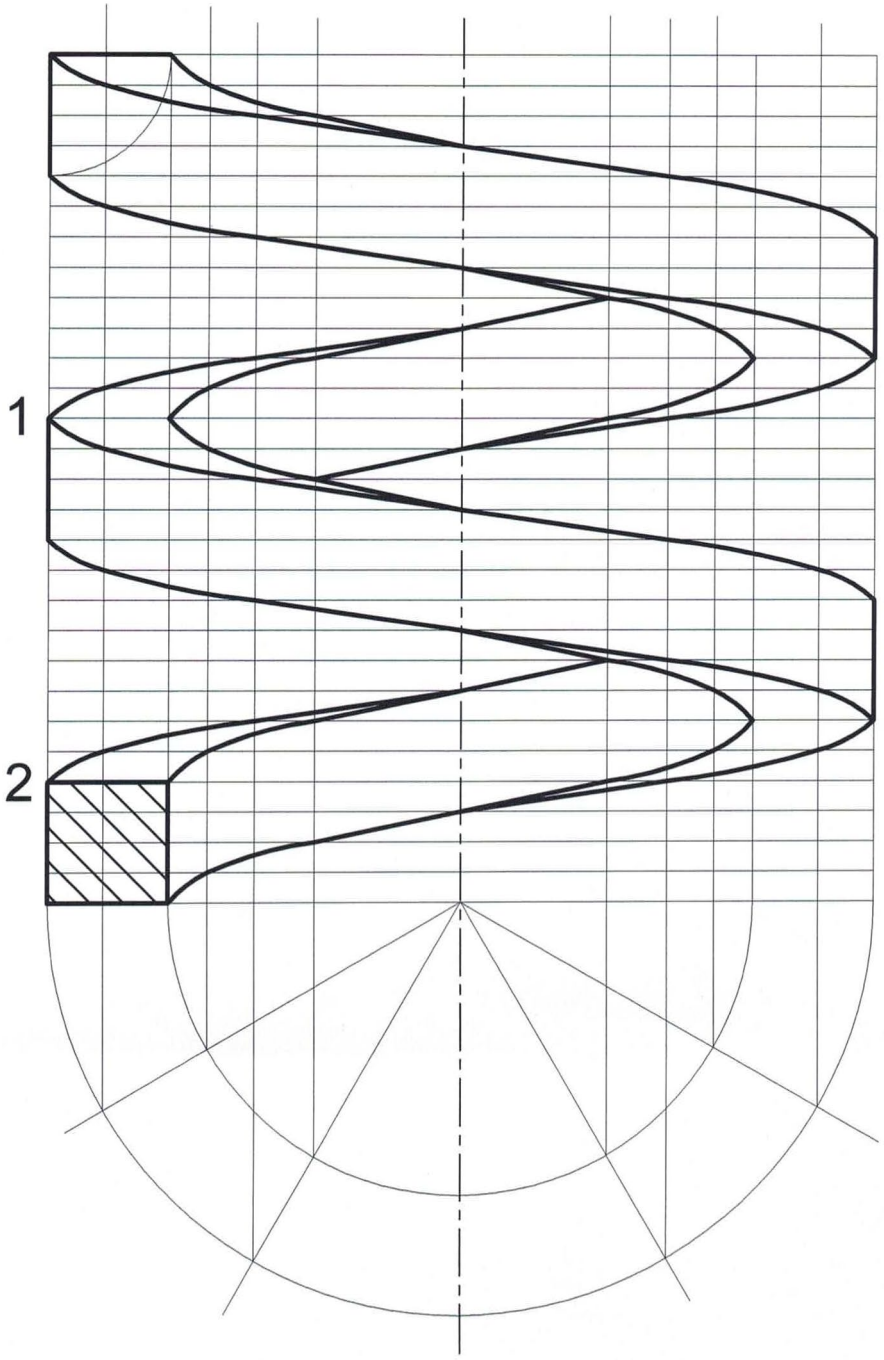

Correctness	=	7%
Line work	=	4%
Accuracy	=	2%
Balance layout/neatness	=	1%

[14]

QUESTION 5: GEAR-TEETH CONSTRUCTION

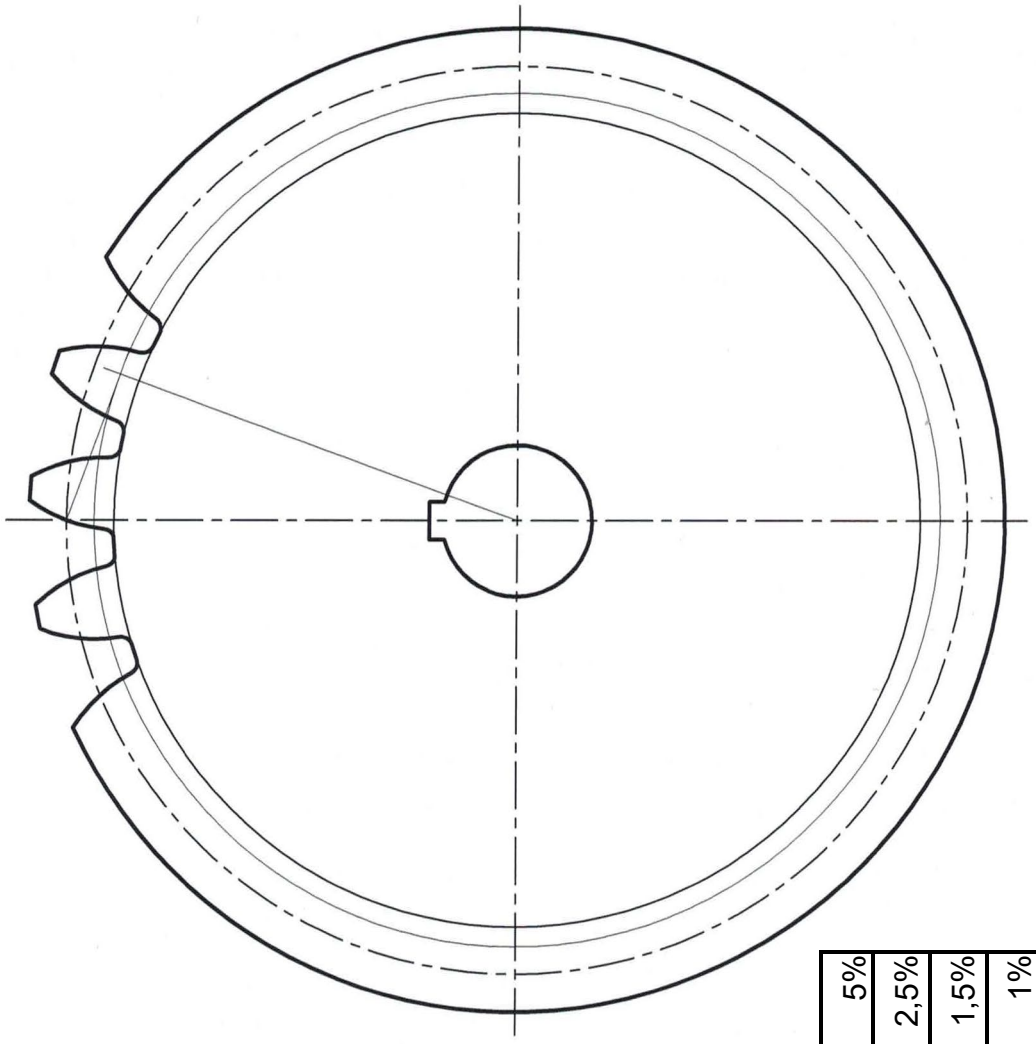

MOD = P.C.D./24
= 120/24
= 5

C.P. = 3,142 X M
= 3,142 X 5
= 15.71

TT = 15.71/2
= 7.855

Correctness	=	5%
Line work	=	2,5%
Accuracy	=	1,5%
Balance layout/neatness	=	1%
Construction and calculations	=	4%

[14]

QUESTION 6: INK DRAWING

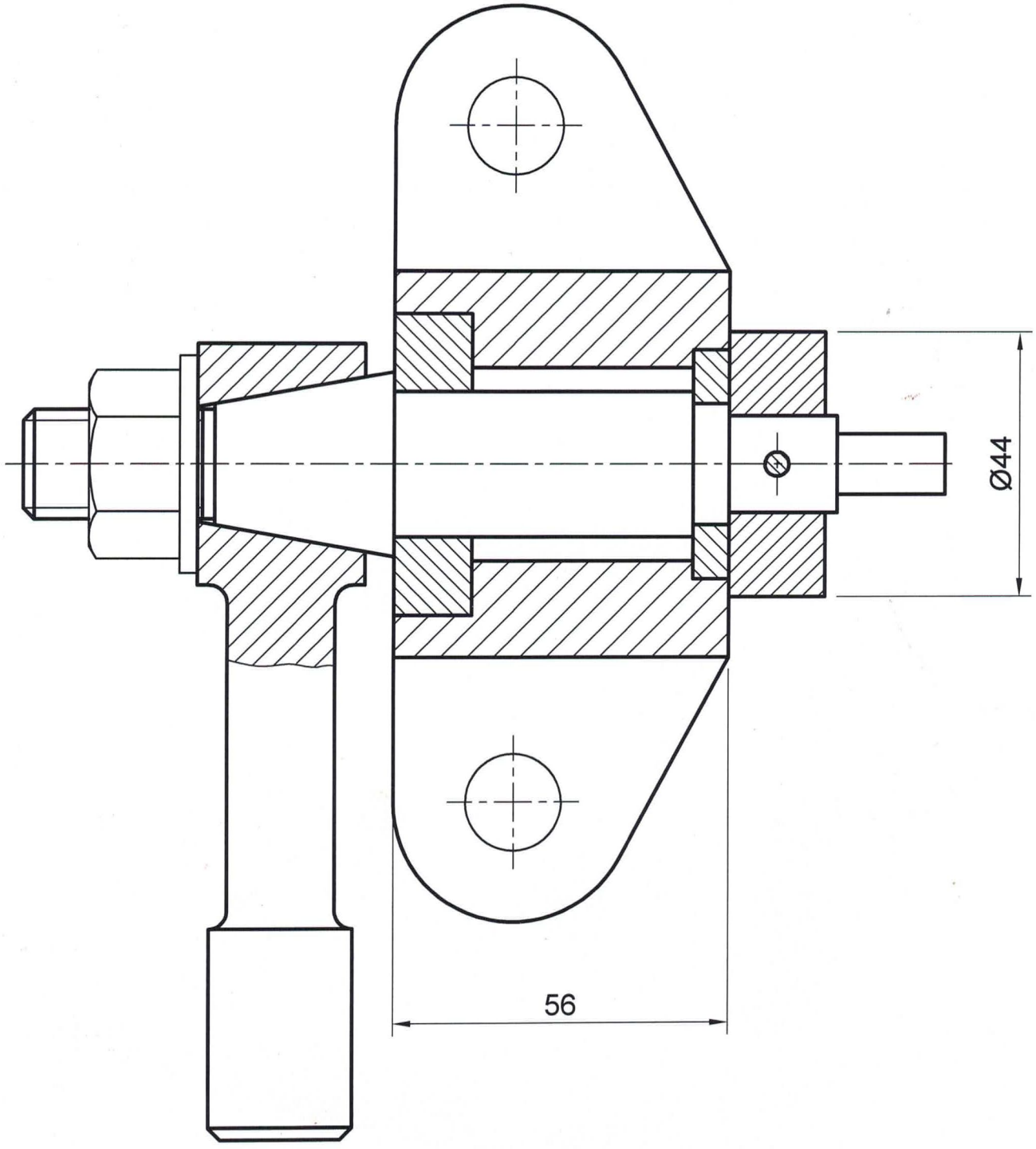

HOPPER LATCH
SCALE 1:1

Correctness	=	9%
Line work	=	4%
Accuracy	=	3%
Balance layout/neatness	=	2%

[18]

TOTAL: 100

Copyright reserved