higher education & training

Department:
Higher Education and Training
REPUBLIC OF SOUTH AFRICA

T1280**(E)**(J31)T

NATIONAL CERTIFICATE: MULTI-DISCIPLINARY DRAWING OFFICE PRACTICE

PICTORIAL DRAUGHTING

(8090214)

31 July 2018 (X-Paper)
09:00–13:00

CLOSED-BOOK EXAMINATION

REQUIREMENTS: ONE sheet of A4 draughting film or gateway tracing paper
ONE A2 drawing sheet

This question paper consists of 4 pages, 4 diagram sheets and 1 formula sheet.

Copyright reserved

DEPARTMENT OF HIGHER EDUCATION AND TRAINING
REPUBLIC OF SOUTH AFRICA

NATIONAL CERTIFICATE: MULTI-DISCIPLINARY DRAWING OFFICE PRACTICE
PICTORIAL DRAUGHTING
TIME: 4 HOURS
MARKS: 100

INSTRUCTIONS AND INFORMATION

1. Answer ALL the questions.
2. Read ALL the questions carefully.
3. Number the answers according to the numbering system used in this question paper.
4. Use both sides of the DRAWING SHEET and answer QUESTION 1, 2 and 3 on the front of the A2 DRAWING SHEET, QUESTION 4 and 5 on the reverse of the A2 DRAWING SHEET and QUESTION 6 on the A4 DRAUGHTING FILM supplied.
5. A balanced layout is very important and candidates will be penalised for poor planning.
6. Draw a 15 mm border around the DRAWING SHEET (on both sides).
7. Clearly indicate question numbers.
8. ALL drawing work, including candidate information, must be in pencil on the A2 DRAWING SHEET and in draughting ink on the A4 DRAUGHTING FILM.
9. ALL drawing work must comply with the SABS 0111-1990 Code of Practice.
10. On completion, fold the A2 DRAWING SHEET to A3 size with the EXAMINATION NUMBER visible on the front. The DRAUGHTING FILM must be placed inside the folded A2 DRAWING SHEET. Do not use staples.
11. Use your own discretion for dimensions not given.
12. Use a 3 mm fillet radius for all radii not given.
13. Write neatly and legibly.

Copyright reserved

QUESTION 1: FREEHAND DRAWING

FIGURE 1, DIAGRAM SHEET 1 (attached), shows a front view of a knuckle joint.

Draw, to scale 1 : 1, freehand and approximately full size a full-sectional front view of the knuckle joint. Do not show any dimensions. **[14]**

QUESTION 2: TWO-POINT PERSPECTIVE DRAWING

FIGURE 2, DIAGRAM SHEET 2 (attached), shows two views of a bearing support in first-angle orthographic projection.

Draw, to scale 1 : 1, by using the measure-point method, a two-point perspective drawing of the bearing support. Point A is situated on the ground line (GL) in line with the centre of vision (CV) and up against the picture plane (PP). Line AB vanishes to the left at 40°. The distance of the eye in front of the picture plane (PP) is 130 mm and the height of the eye above the ground line (GL) is 100 mm. (16)

Show ALL necessary points on the construction, for example CV, VPs, etcetera. (4)

NOTE: Create an auxiliary view of the pentagonal hole in order to obtain the dimension of the hole in perspective. **[20]**

QUESTION 3: OBLIQUE PROJECTION

FIGURE 3, DIAGRAM SHEET 3 (attached), shows two views of a geometric model in third-angle orthographic projection.

Do not copy the given views, but use the cabinet method to draw, to scale 1 : 1, an oblique projection of the geometric model to the given dimensions. Do not show any hidden detail. Do not insert any dimensions. **[20]**

QUESTION 4: SQUARE-SPRING CONSTRUCTION

Draw, to scale 1 : 1 and full size, TWO complete right-hand coiled turns of a helical spring made of 15 mm square material. The outside diameter is 130 mm and the lead is 60 mm. Show ALL construction lines used to draw the spring. Do not show any hidden detail. **[14]**

Copyright reserved

QUESTION 5: GEAR-TEETH CONSTRUCTION

Use a suitable method to draw the involute profile of TWO teeth of a spur gear. The rest of the gear must be drawn according to the conventional representation.

Gear data:

Pitch-circle diameter: 110 mm
Number of teeth: 20
Hole diameter: 28 mm (10)

Show the keyway for a 28 mm-diameter hole using empirical values. Show ALL construction lines and calculations for the module, circular pitch and tooth thickness on the DRAWING SHEET. (4)
[14]

QUESTION 6: INK DRAWING

FIGURE 4, DIAGRAM SHEET 4 (attached), shows an outside front view and a sectional right view on X-X of a valve body in third-angle orthographic projection.

Draw with ink pens, to scale 1 : 2, a full-sectional front view on cutting plane Y–Y of the valve body. Print or stencil a suitable title and scale centred beneath the layout/drawing and insert any FOUR dimensions. **[18]**

TOTAL: 100

Copyright reserved

DIAGRAM SHEET 1

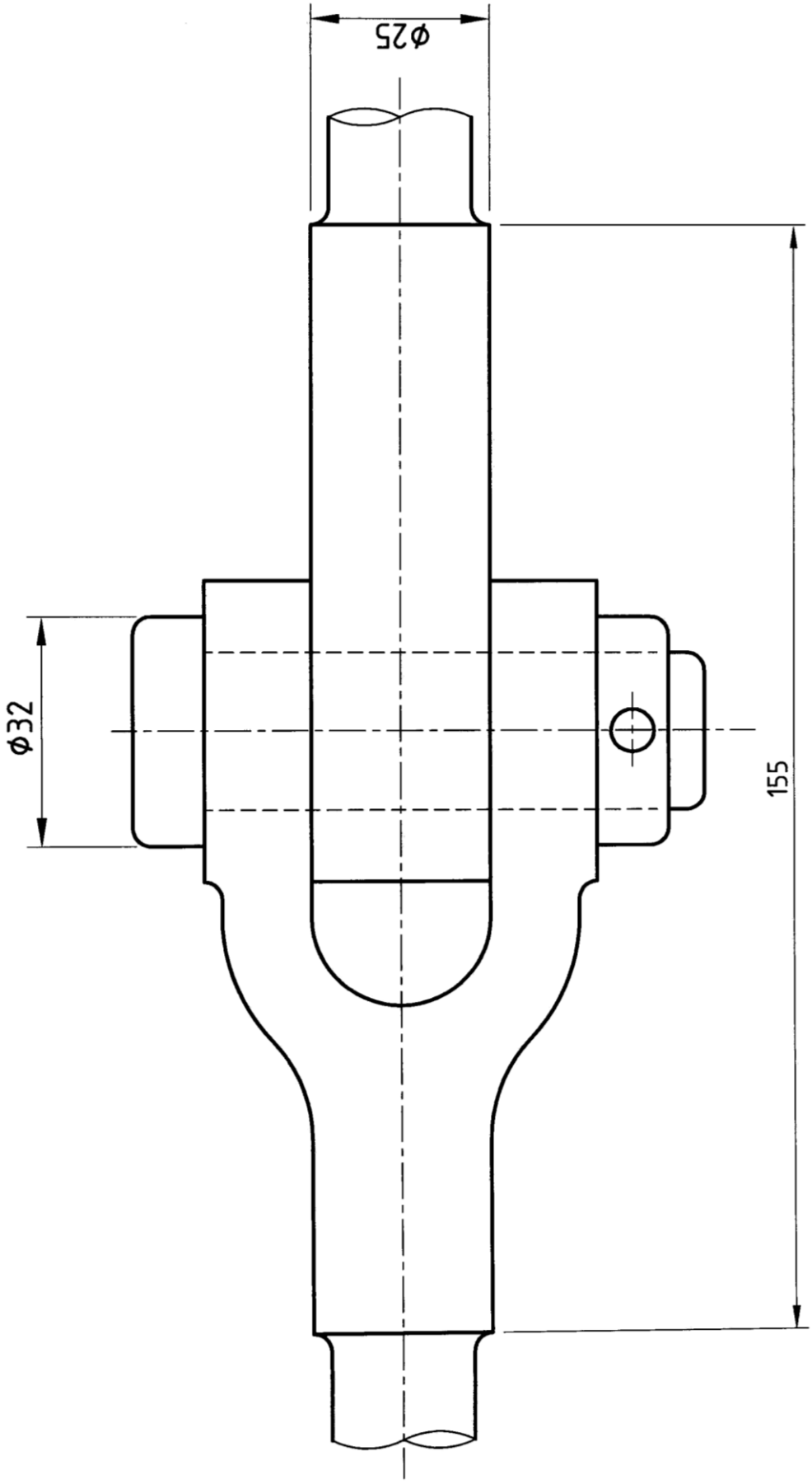

FIGURE 1

Copyright reserved

DIAGRAM SHEET 2

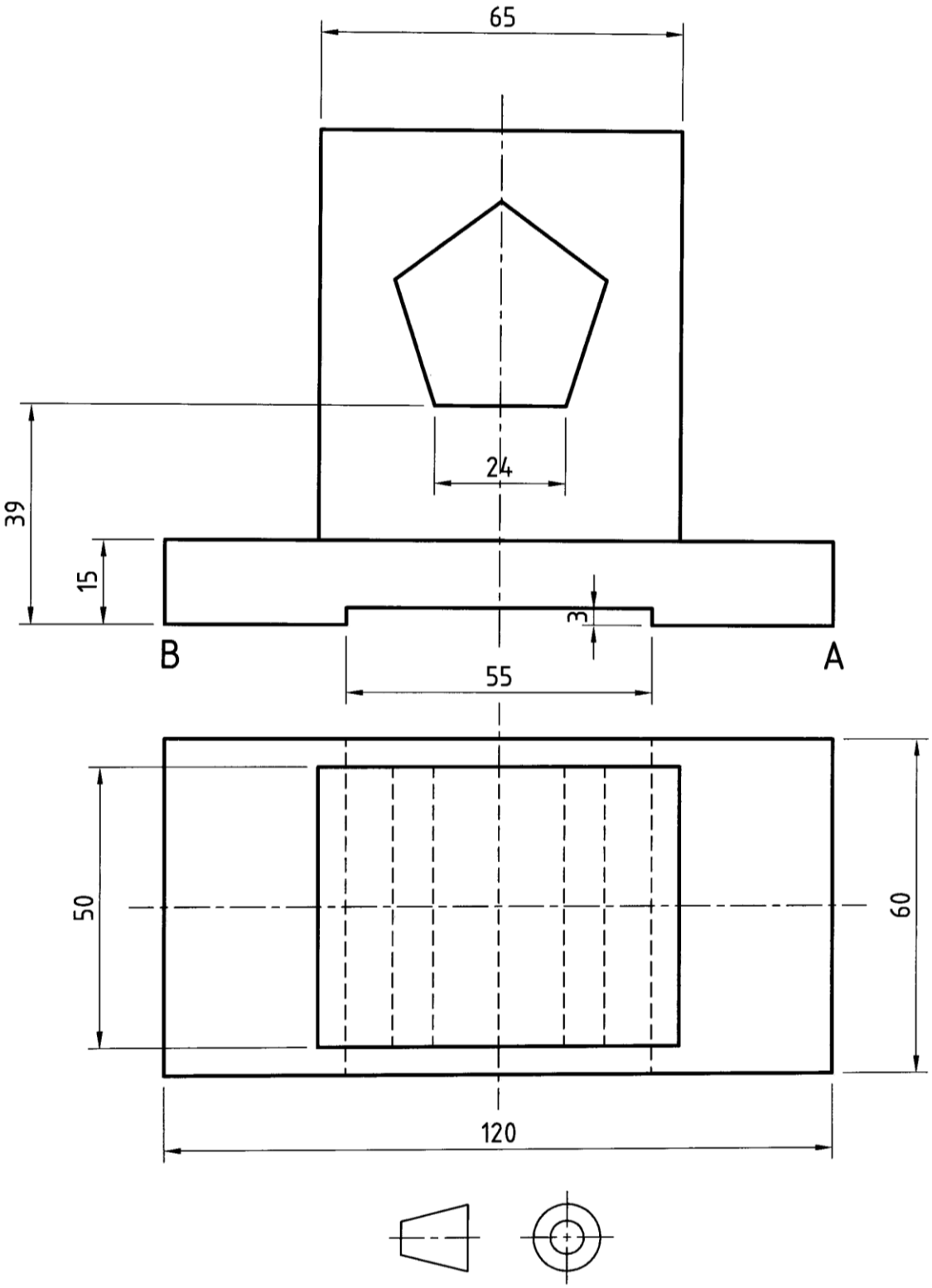

FIGURE 2

Copyright reserved

DIAGRAM SHEET 3

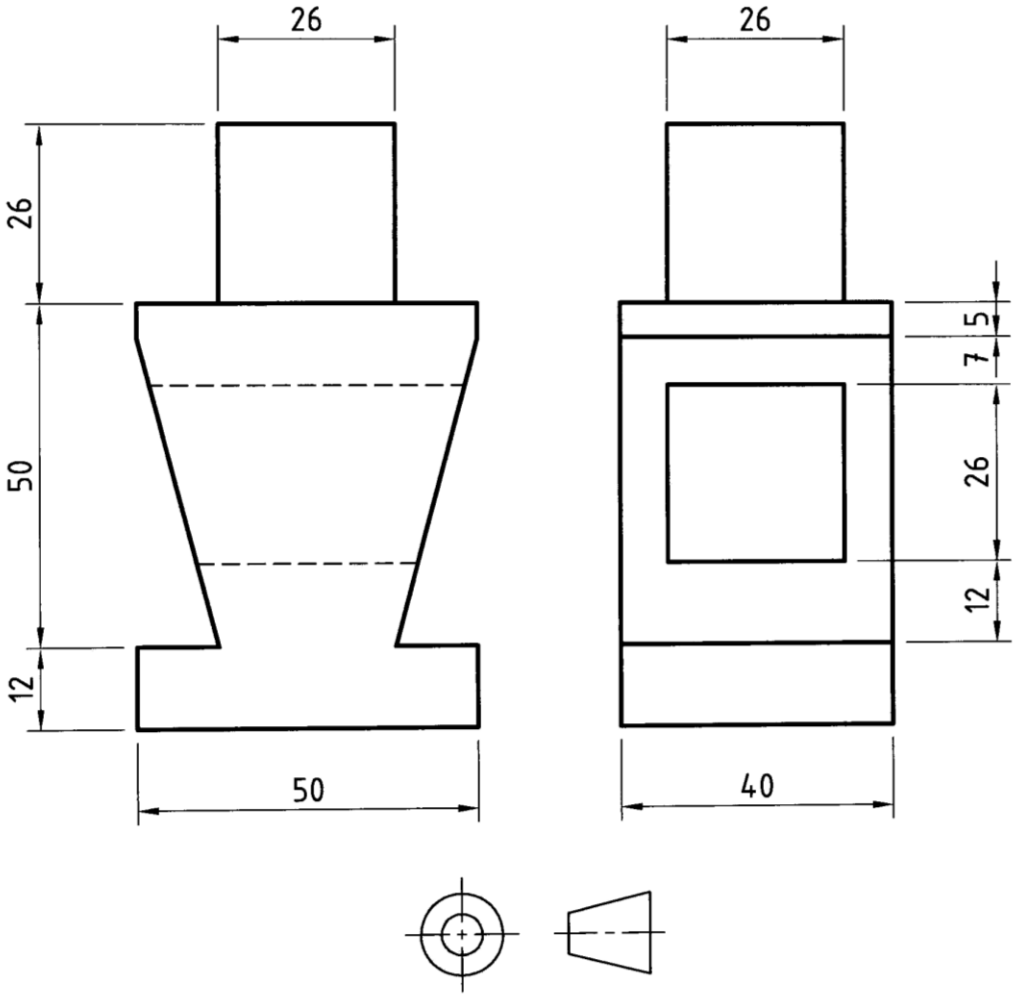

FIGURE 3

DIAGRAM SHEET 4

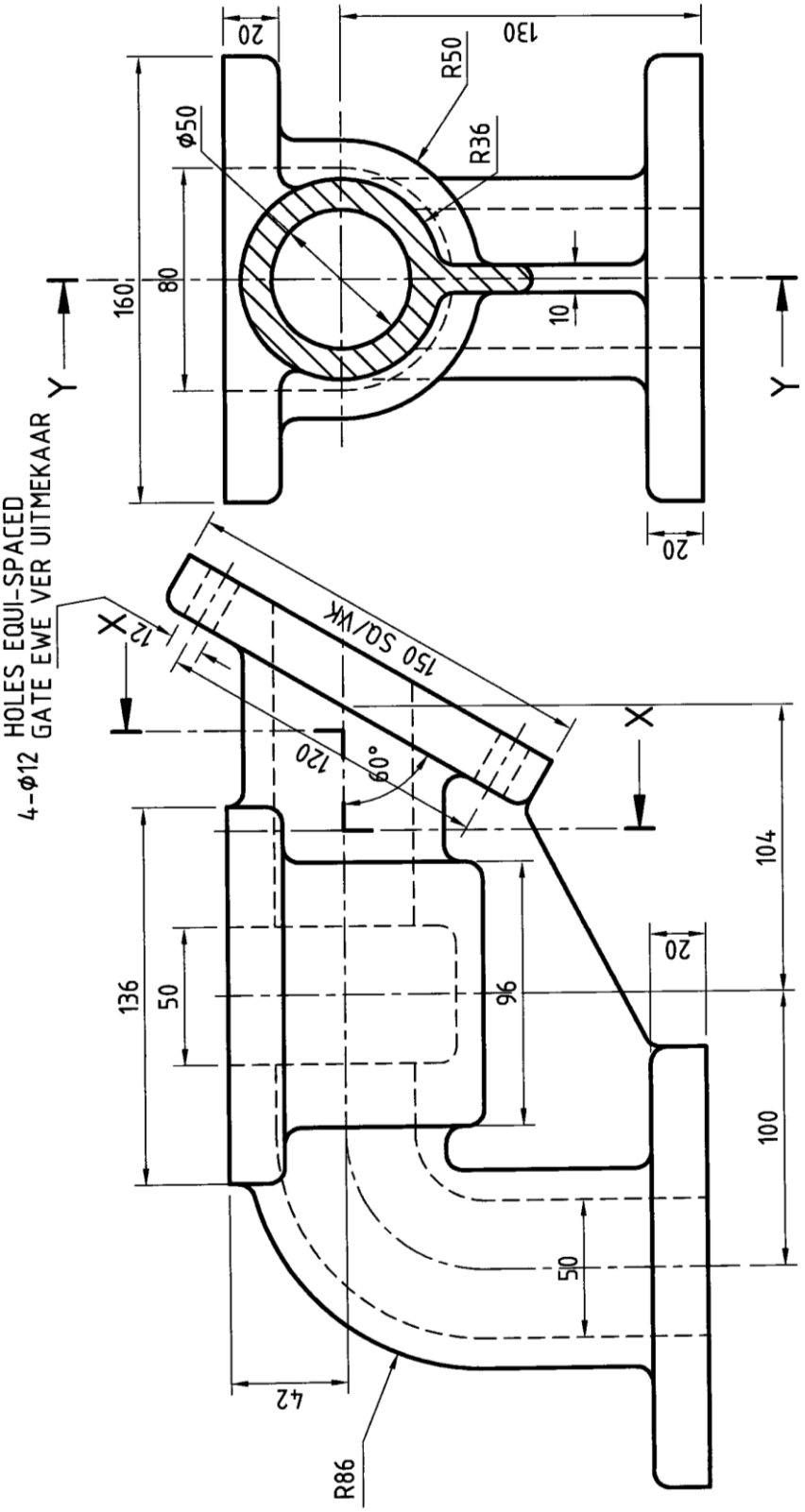

FIGURE 4

Copyright reserved

FORMULA SHEET

1. Screw-thread construction

Length = (pitch × number of turns) + pitch/2

Pitch divisions = pitch/12

2. Gear-teeth construction

Module = addendum

Dedendum = 1,25 × module

PCD = module × number of teeth

Fillet radius = 0,3 × module

Circular pitch = 3,142 × module

3. Square-spring construction

Length = (lead × number of turns) + material thickness

Copyright reserved