higher education & training

Department:
Higher Education and Training
REPUBLIC OF SOUTH AFRICA

MARKING GUIDELINE

NATIONAL CERTIFICATE: MULTI-DISCIPLINARY DRAWING OFFICE PRACTICE

PICTORIAL DRAUGHTING

31 JULY 2018

This marking guideline consists of 7 pages.

Copyright reserved

QUESTION 1: FREEHAND DRAWING

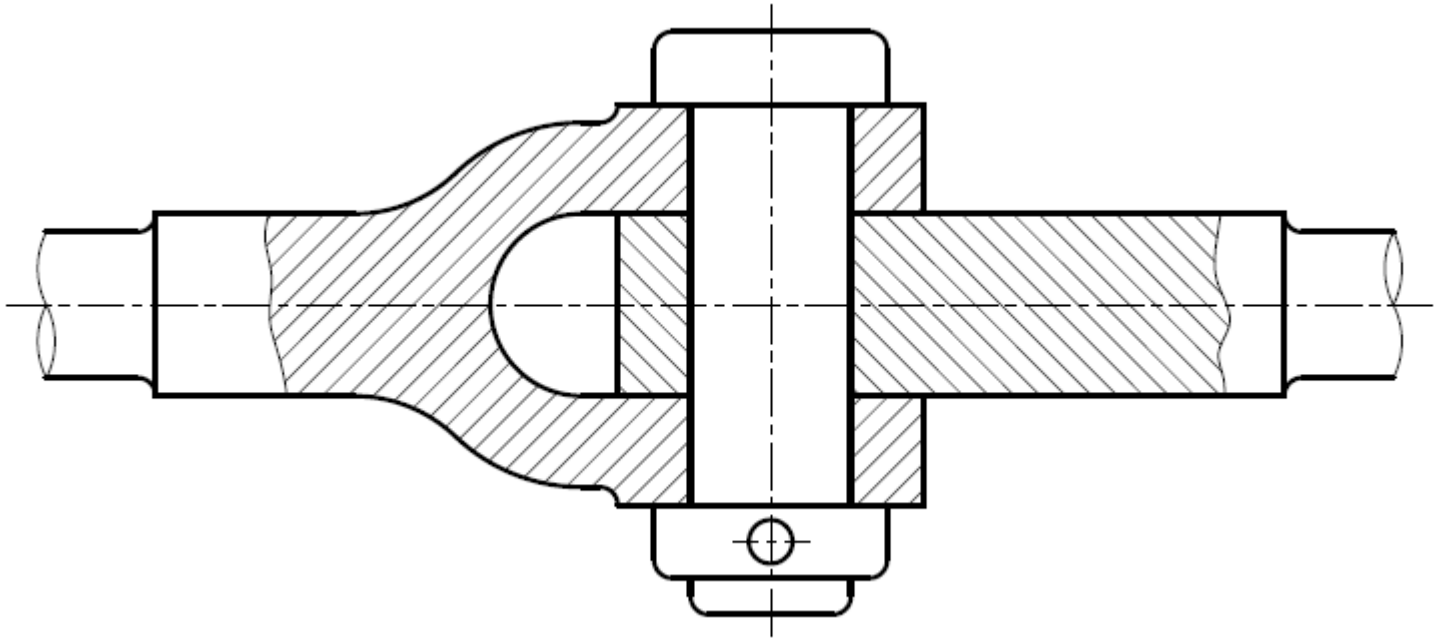

Proportion	7
Line work	4
Accuracy	2
Balance layout	1
TOTAL:	14

[14]

Copyright reserved

QUESTION 2: TWO-POINT PERSPECTIVE DRAWING

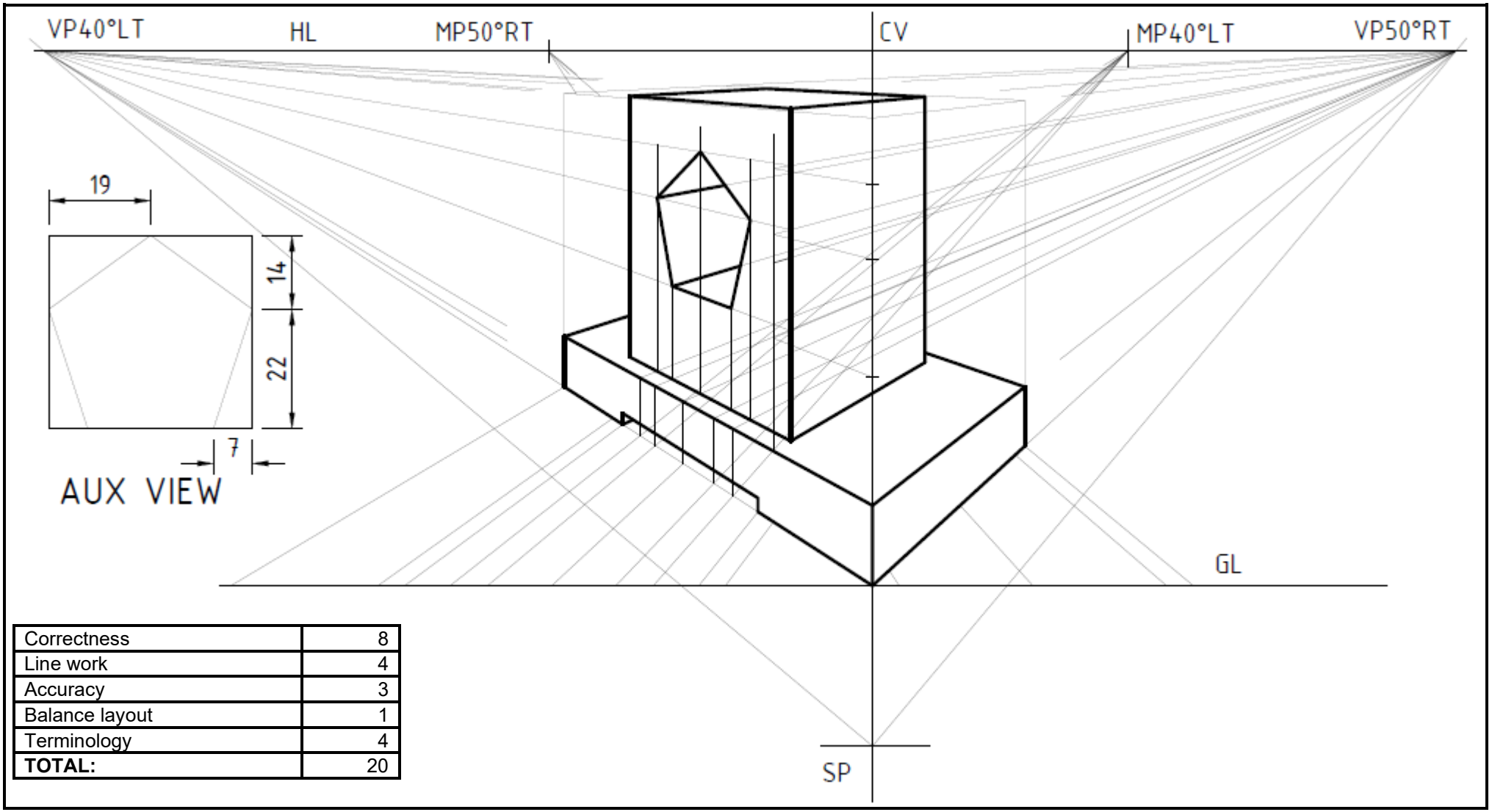

Correctness	8
Line work	4
Accuracy	3
Balance layout	1
Terminology	4
TOTAL:	20

[20]

QUESTION 3: OBLIQUE PROJECTION

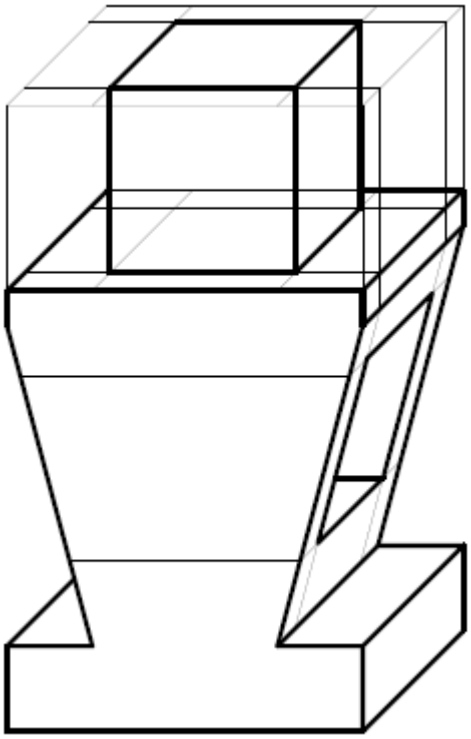

Correctness	10
Line work	5
Accuracy	3
Balance layout	2
TOTAL:	20

[20]

QUESTION 4: SQUARE-SPRING CONSTRUCTION

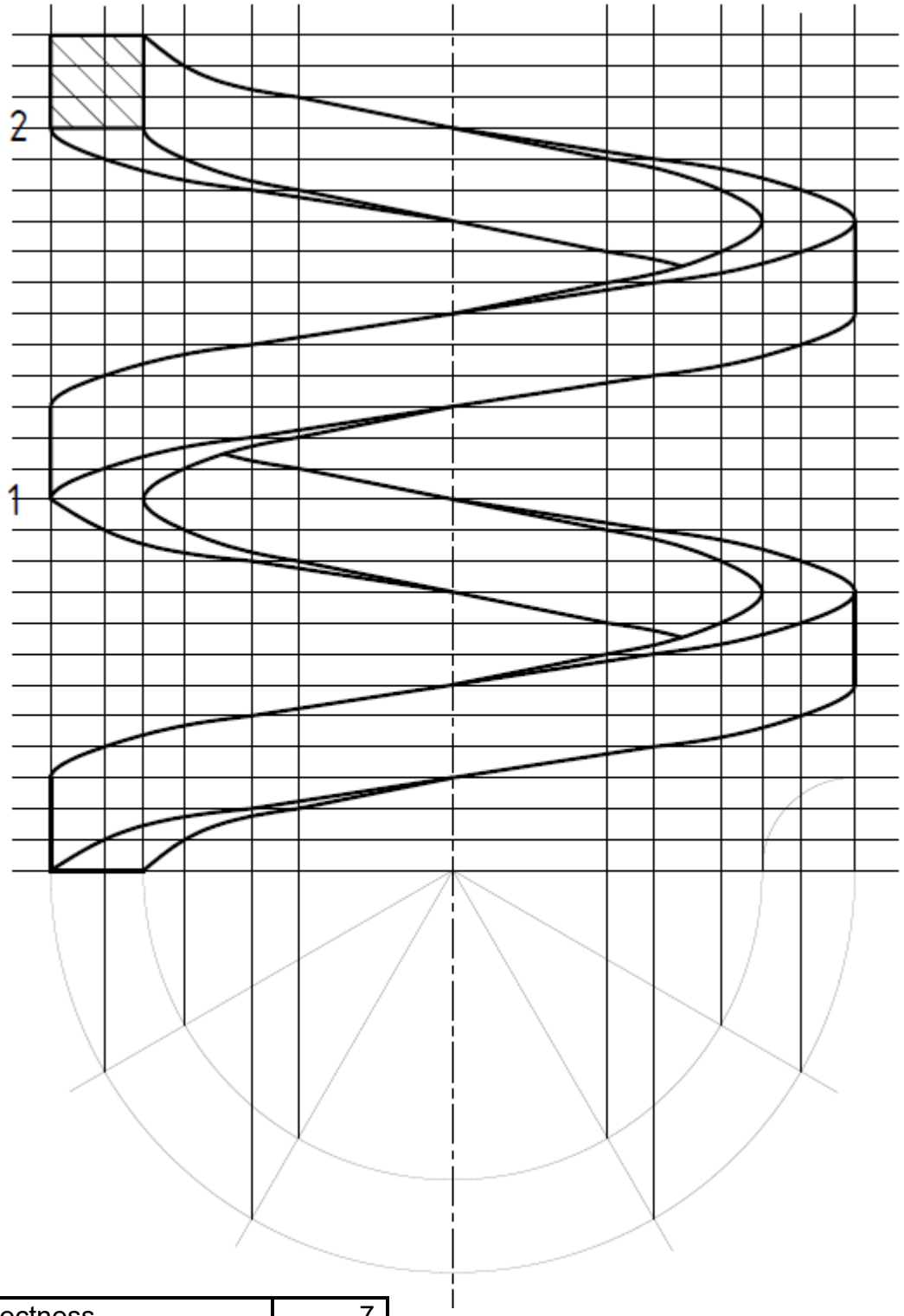

Correctness	7
Line work	4
Accuracy	2
Balance layout	1
TOTAL:	14

[14]

QUESTION 5: GEAR-TEETH CONSTRUCTION

MOD = P.C.D./20
= 110/20
= 5,5

C.P. = 3,142 X M
= 3,142 X 5,5
= 17,281

TT = 17,281/2
= 8,64

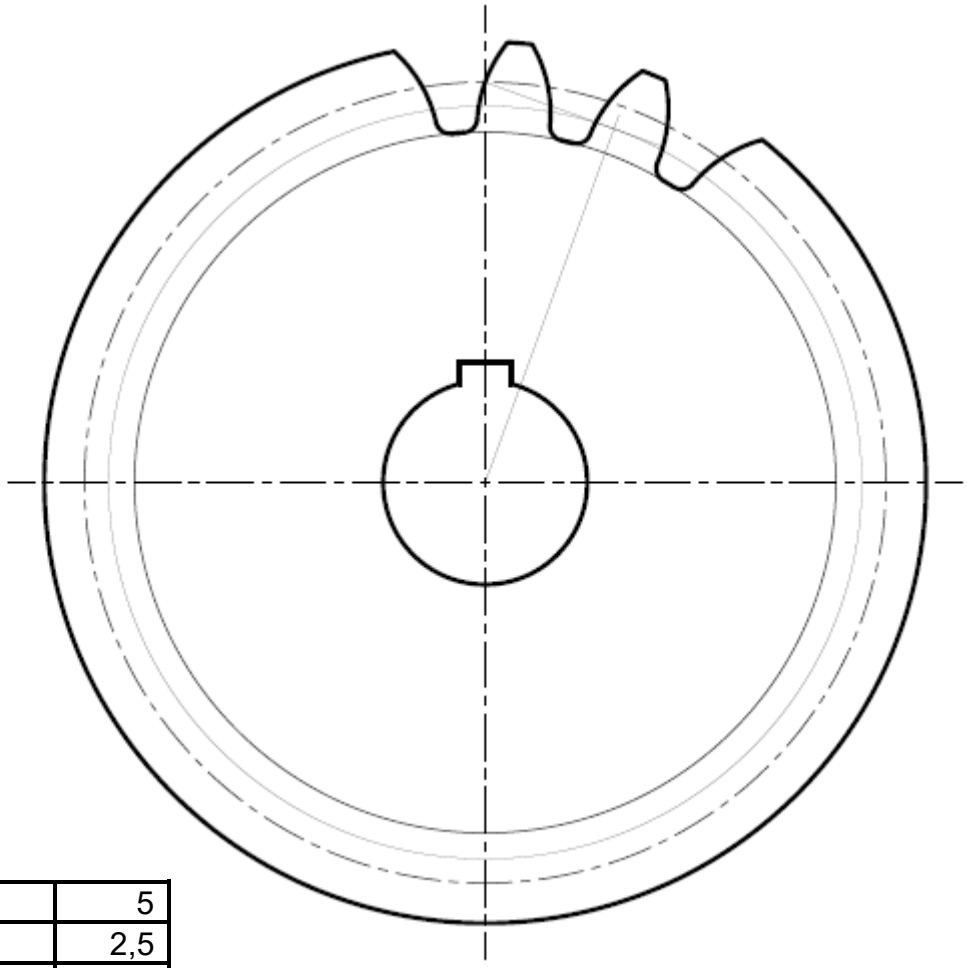

Correctness	5
Line work	2,5
Accuracy	1,5
Balance layout	1
Construction and calculator	4
TOTAL:	14

[14]

QUESTION 6: INK DRAWING

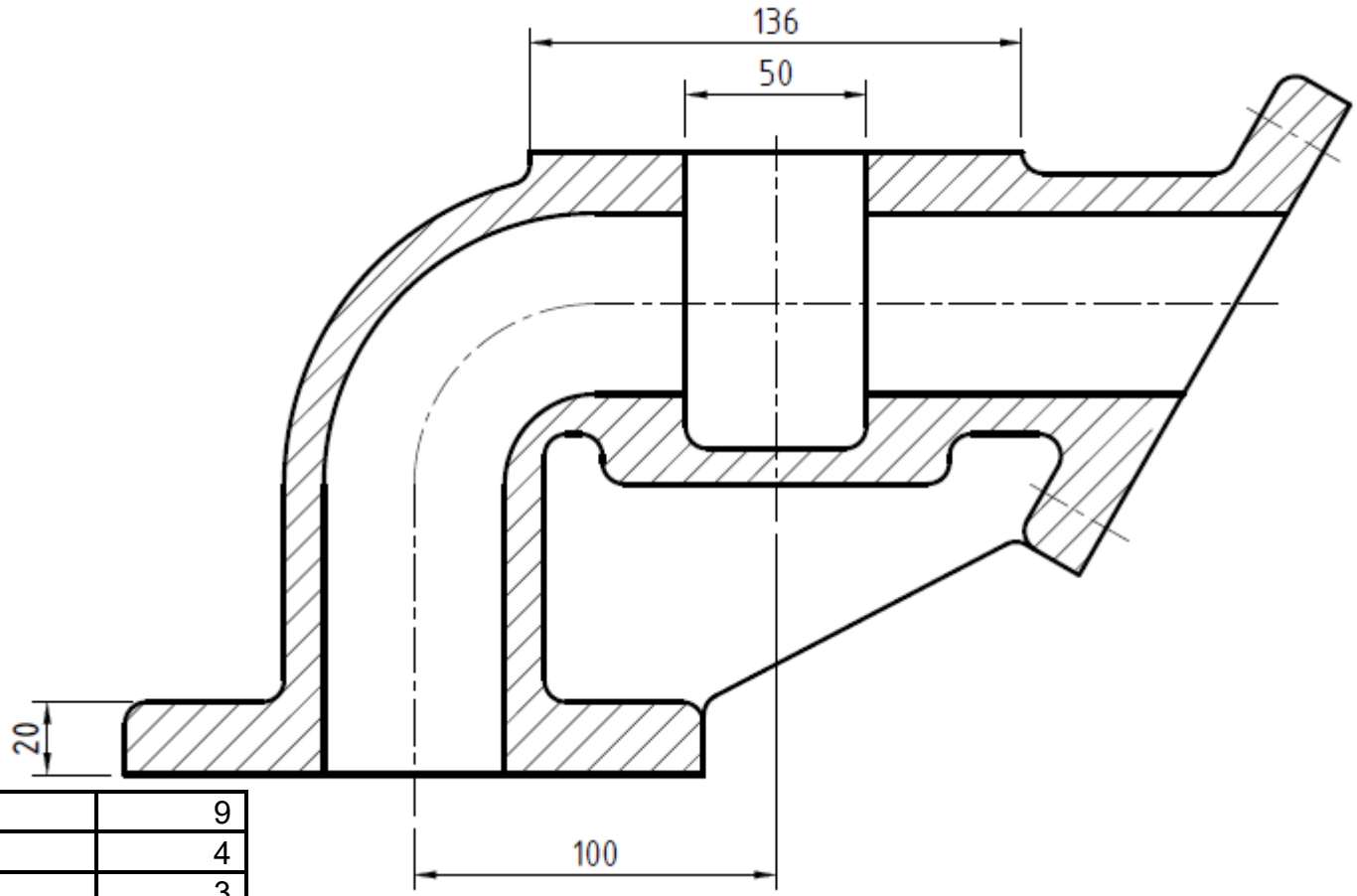

Correctness	9
Line work	4
Accuracy	3
Balance layout	2
TOTAL:	18

RELIEF VALVE BODY
SCALE 1 : 2

[18]

TOTAL: 100

Copyright reserved