higher education & training

Department:
Higher Education and Training
REPUBLIC OF SOUTH AFRICA

NATIONAL CERTIFICATE: MULTI-DISCIPLINARY DRAWING OFFICE PRACTICE

PICTORIAL DRAUGHTING

(8090214)

12 April 2021 (X-paper)
09:00–13:00

REQUIREMENTS: **ONE A2 drawing sheet**
ONE sheet of A4 draughting film or gateway tracing paper

CLOSED BOOK EXAMINATION

This question paper consists of 5 pages, 1 information sheet and 6 diagram sheets.

144Q1A2112

Copyright reserved

DEPARTMENT OF HIGHER EDUCATION AND TRAINING
REPUBLIC OF SOUTH AFRICA

NATIONAL CERTIFICATE
PICTORIAL DRAUGHTING
TIME: 4 HOURS
MARKS: 100

INSTRUCTIONS AND INFORMATION

1. Answer all the questions.
2. Read all the questions carefully.
3. Number the answers according to the numbering system used in this question paper.
4. QUESTION 1, QUESTION 2 and QUESTION 3 must be answered on one side of the A2 drawing sheet, while QUESTION 4 and QUESTION 5 must be answered on the other side of the A2 drawing sheet.
5. QUESTION 6 must be answered on the sheet of draughting film.
6. A balanced layout is important and candidates will be penalised for poor planning.
7. A 15 mm border must be drawn around the drawing sheet on both sides.
8. All drawing work on the A2 drawing sheet, including candidate information, must be completed in pencil and in draughting ink on the A4 DRAUGHTING FILM.
9. All drawing work must comply with the SABS 0111-1990 Code of Practice.
10. Use a 3 mm fillet radius for all radii not given.
11. Discretion must be used for dimensions not given.
12. On completion, fold the A2 DRAWING SHEET to A3 size with the EXAMINATION NUMBER visible on the front. Place the DRAUGHTING FILM inside the folded A2 DRAWING SHEET. Do not use any staples.
13. Work neatly.

Copyright reserved

QUESTION 1: FREEHAND DRAWINGS

DIAGRAM SHEET 1 (attached) shows an isometric view of a support block in first-angle orientation.

Make approximate full-size freehand drawings of each of the following views, using the given dimensions:

1. Front view in direction of arrow A (5)

2. Left view in direction of arrow B (4)

3. Top view in direction of arrow C (5)

Show hidden details (dash lines) in the left view only.

Do not add any dimensions to the completed drawing.

[14]

QUESTION 2: ONE-POINT PERSPECTIVE DRAWINGS

DIAGRAM SHEET 2 (attached) shows two views of a grooved support in first-angle orthographic projection.

The distance of the eye in front of the picture plane (PP) is 130 mm and the height of the eye above the ground line (GL) is 100 mm. Point A is situated on the ground line (GL), up against the picture plane (PP) and in line with the centre of vision (CV). Line AB lies to the left of the centre of vision and parallel on the ground line.

Make a one-point perspective drawing of the grooved support according to scale 1:1. (16)

Show all the necessary points on the construction, for example the CV and VPs. (4)

[20]

QUESTION 3: ISOMETRIC PROJECTION

DIAGRAM SHEET 3 shows two views of a geometrical block in first-angle orthographic projection.

Draw, according to scale 1:1, an isometric projection of the geometrical block. Do not copy the given views, but construct a suitable isometric scale.

Do not show any hidden detail and do not insert any dimensions. **[20]**

Copyright reserved

QUESTION 4: SQUARE SPRING CONSTRUCTION

DIAGRAM SHEET 4 (attached) shows various kinds of right-hand square and rectangular springs used in industry.

Make a detailed drawing, according to scale 1:1, of a square spring showing the true form of the spring with two right-hand turns according to the specifications below.

Outside diameter: 110 mm
Lead: 48 mm
Bar size: 16 mm square

Show all construction lines and number the turns on the drawing. Do not show any hidden detail or calculations.

HINT: The square spring must be drawn in a vertical position, with the sectional portion at the top left-hand side of the completed drawing. **[14]**

QUESTION 5: GEAR TOOTH CONSTRUCTION

DIAGRAM SHEET 5 (attached) shows a pictorial view of a sprocket-type gear with 19 teeth as numbered in the picture. The sprocket gear is made of mild steel.

Make a detailed drawing according to scale 1:1 of only THREE teeth of the sprocket gear using an approximate method. No other details are required on the drawing.

Pitch circle diameter (PCD) of sprocket gear: 171 mm
Number of teeth: 19 (10)

Show ALL construction lines and calculations on the completed drawing. (4)
[14]

Copyright reserved

QUESTION 6: INK DRAWINGS

DIAGRAM SHEET 6 (attached) shows a full-sectional front view and an outside right view of a pulley support bracket in third-angle orthographic projection.

Draw, with ink pens and according to scale 1:1, the following views:

1. Full sectional front view as given (10)

2. Full sectional right view (8)

Show hidden detail of the oil hole in the right view only.

Use discretion for dimensions not given. **[18]**

TOTAL: 100

Copyright reserved

PICTORIAL DRAUGHTING

INFORMATION SHEET

1. SCREW-THREAD CONSTRUCTION/SKROEFDRAADKONSTRUKSIE

   Length = (pitch × number of turns) + pitch/2

   Pitch divisions = pitch/12

2. GEAR TEETH CONSTRUCTION

   Module = addendum

   Dedendum = 1,25 × module

   PCD = module × number of teeth

   Fillet radius = 0,3 × module

   Circular pitch = 3,142 × module

3. SQUARE SPRING CONSTRUCTION

   Length = (lead × number of turns) + material thickness

Copyright reserved

PICTORIAL DRAUGHTING

DIAGRAM SHEET 1

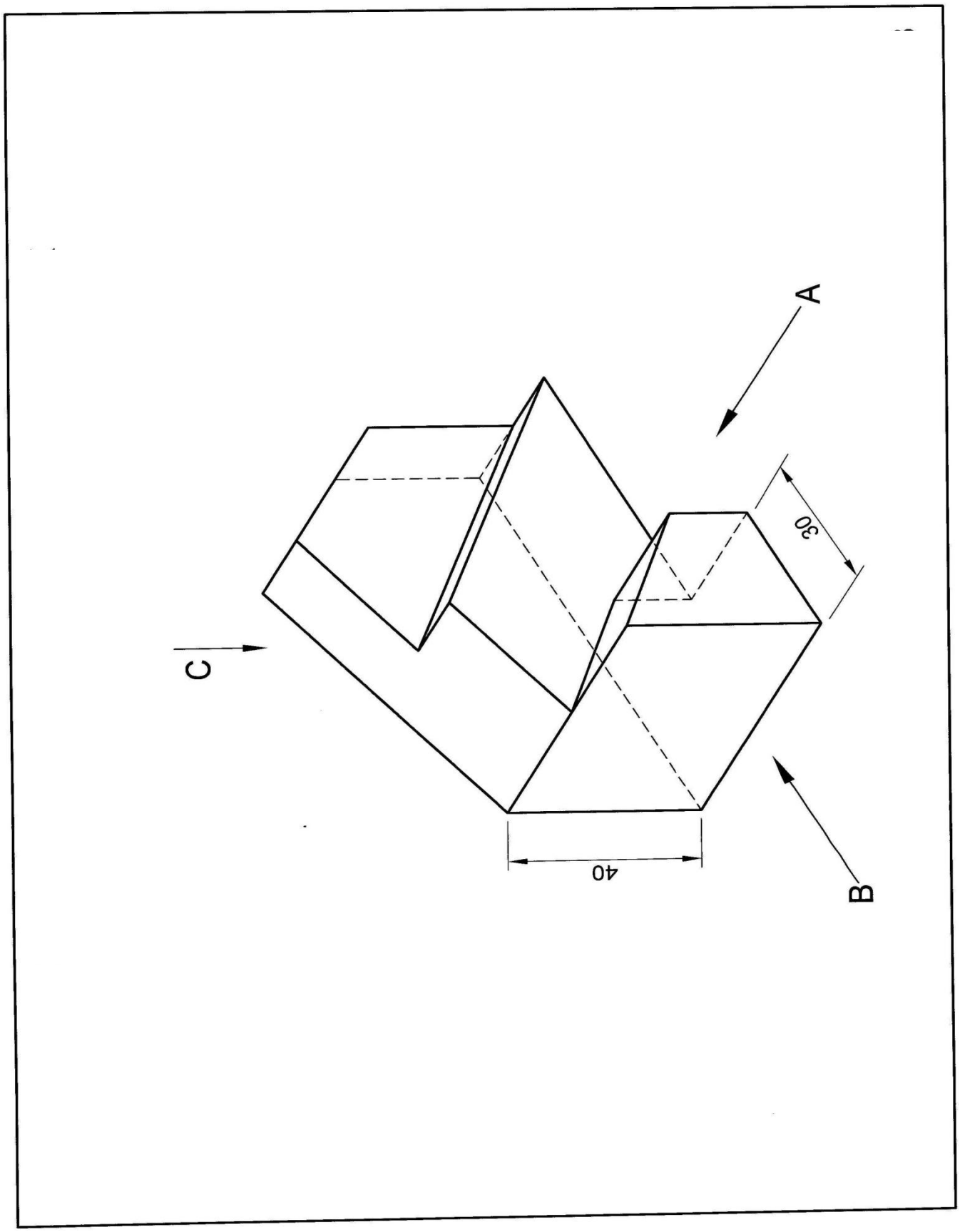

Copyright reserved

DIAGRAM SHEET 2

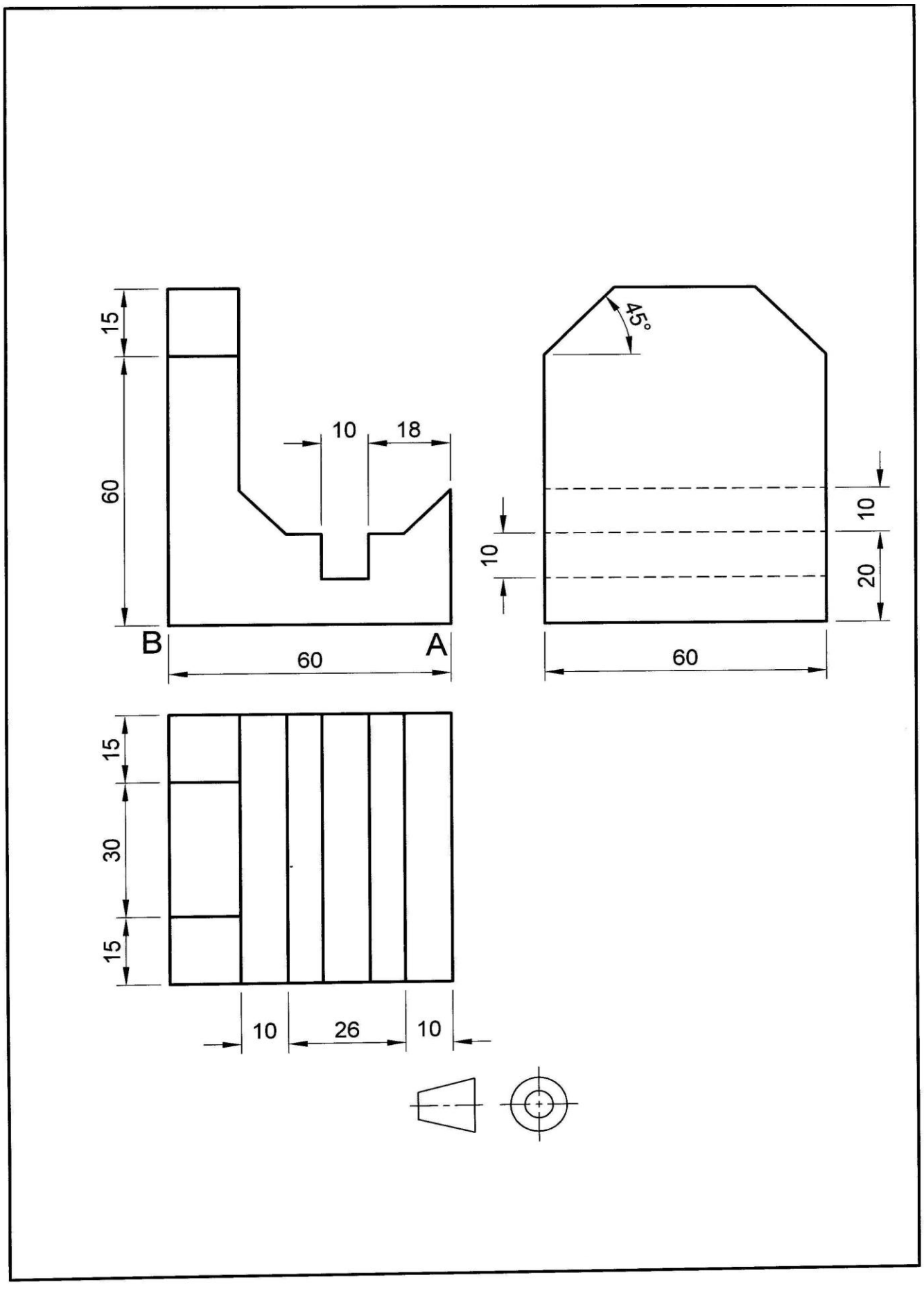

Copyright reserved

DIAGRAM SHEET 3

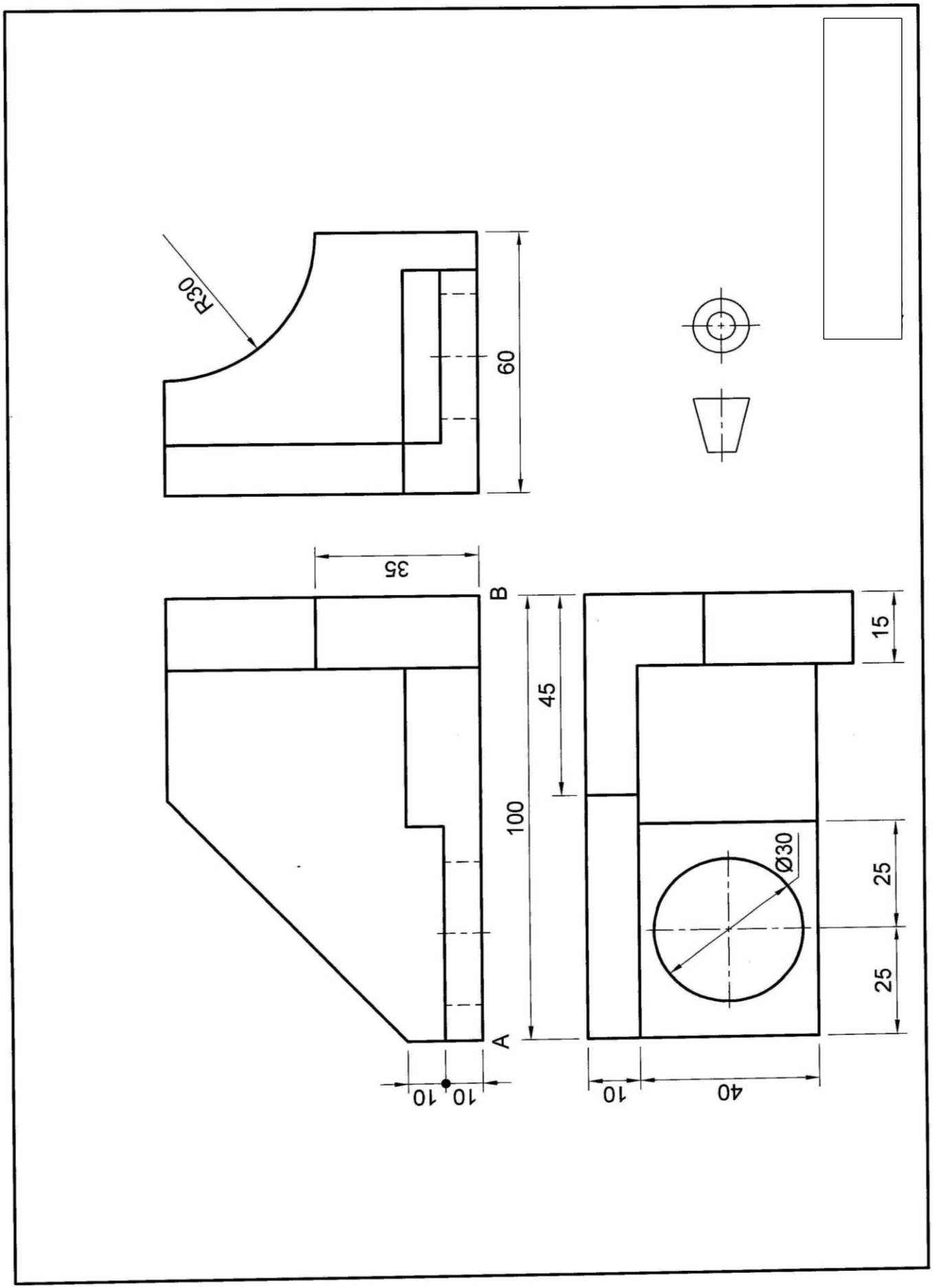

Copyright reserved

DIAGRAM SHEET 4

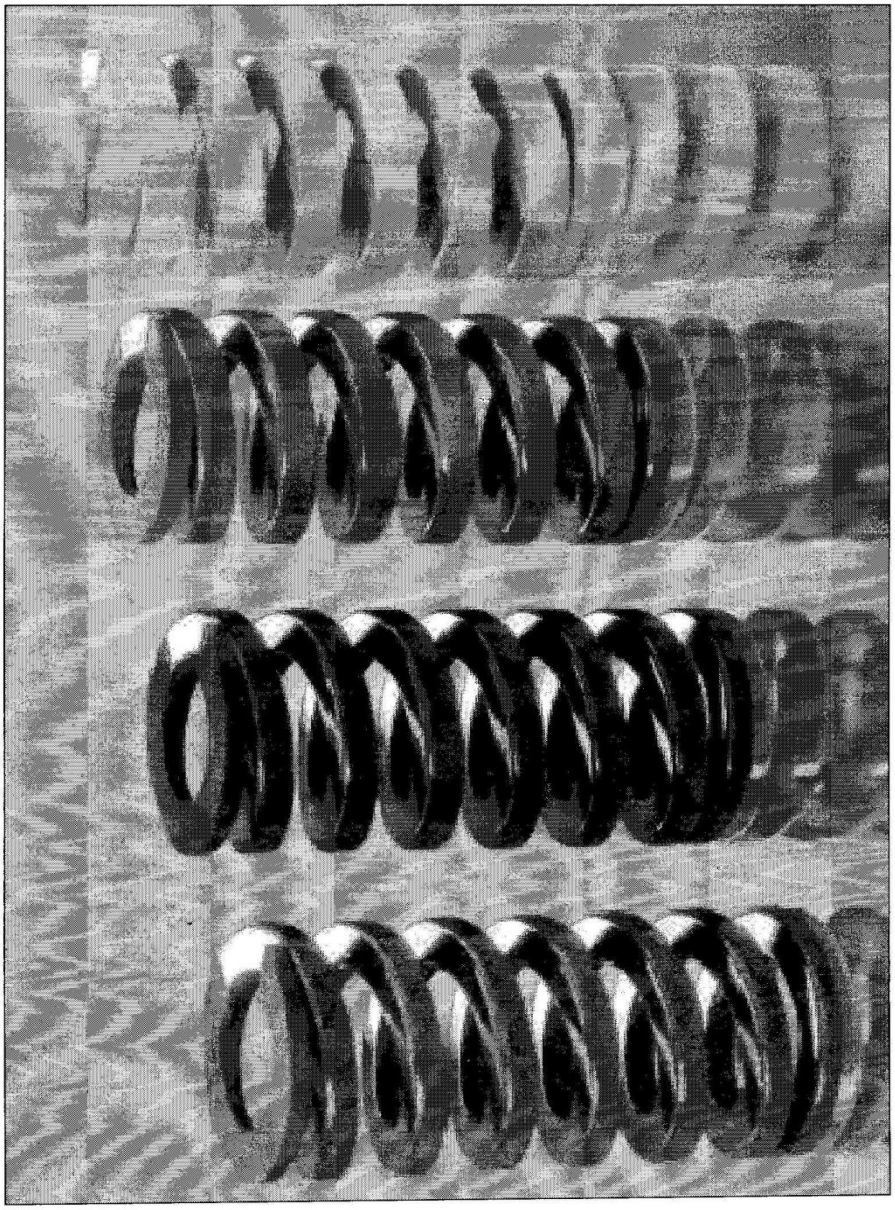

Copyright reserved

DIAGRAM SHEET 5

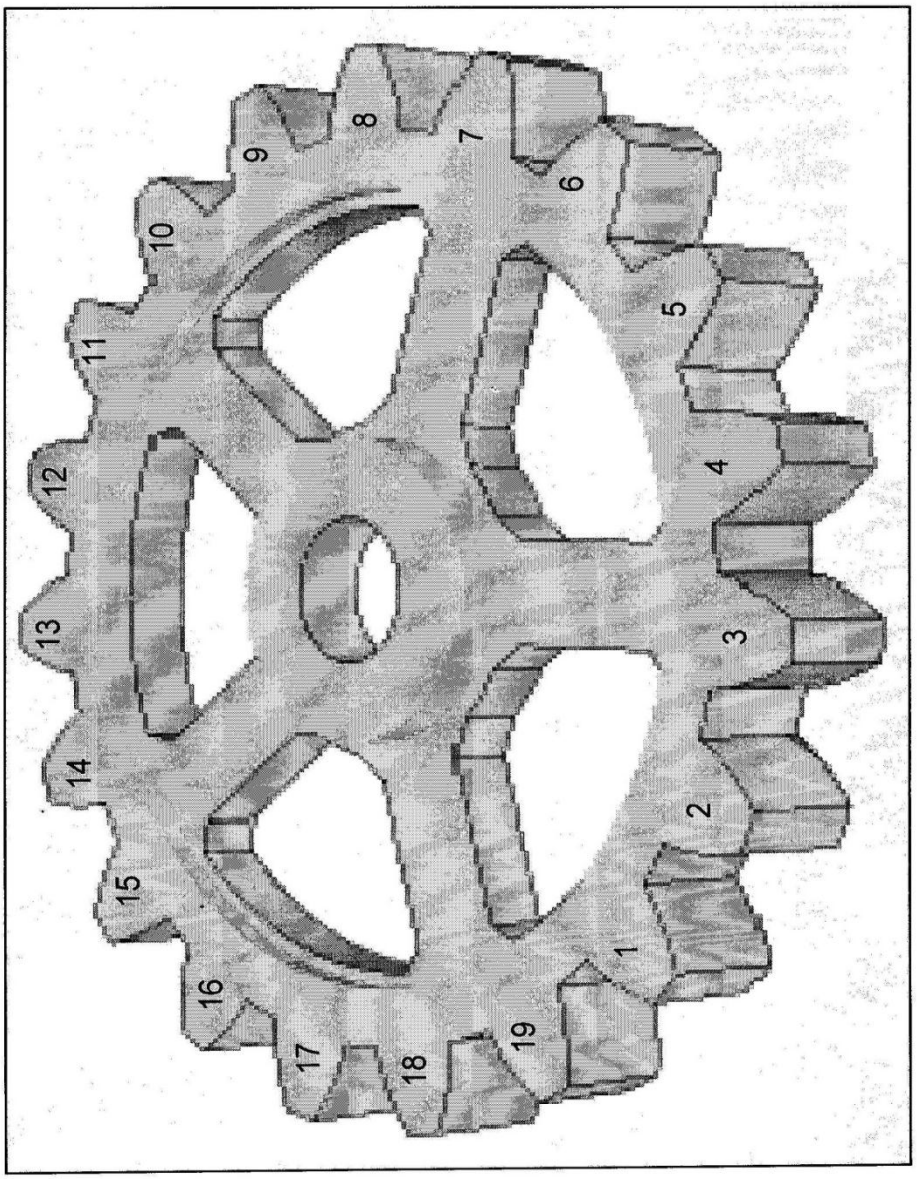

SPROCKET GEAR PCD = 171 WITH 19 TEETH

Copyright reserved

DIAGRAM SHEET 6

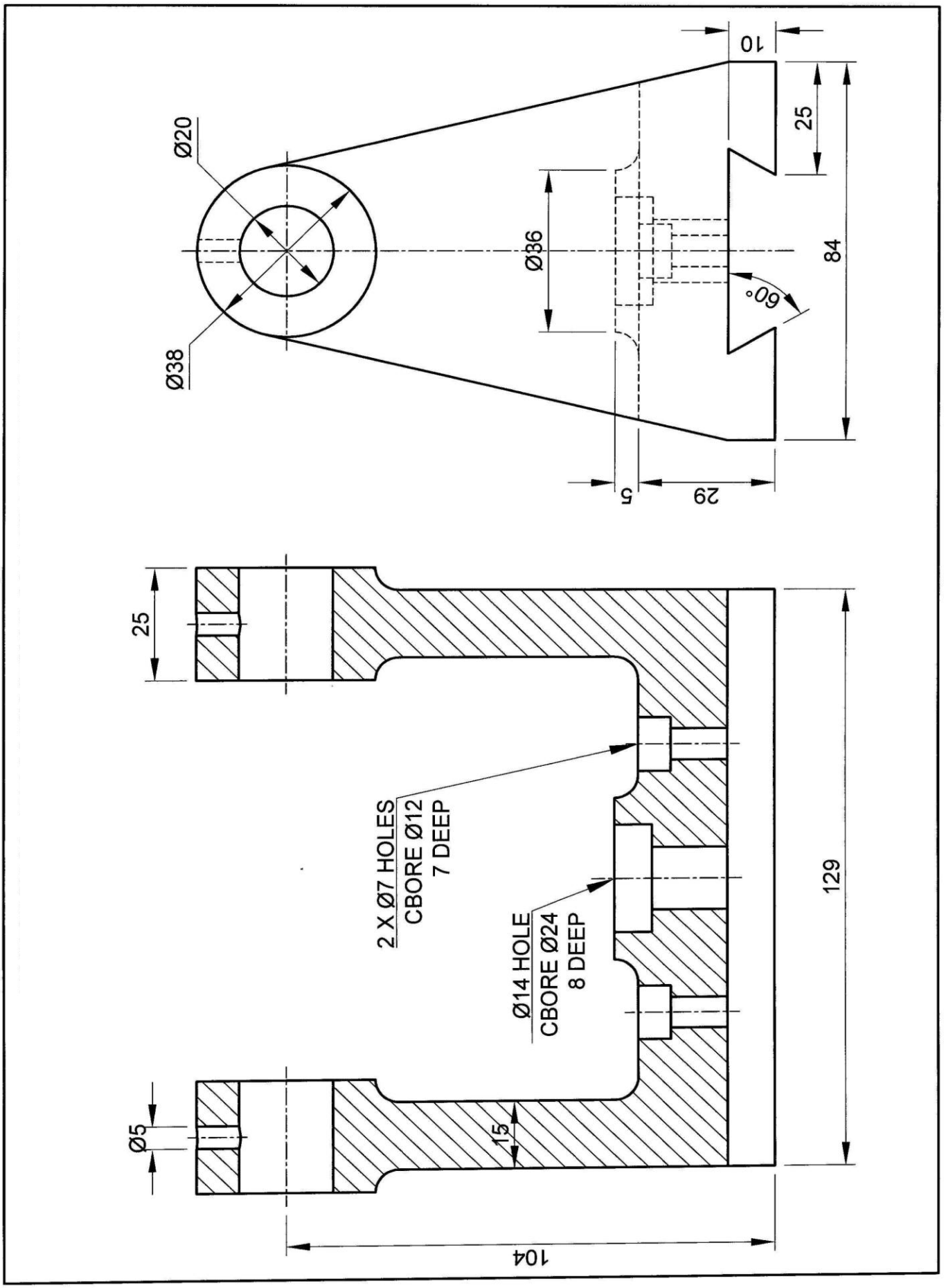

Copyright reserved

Copyright reserved