higher education & training

Department:
Higher Education and Training
REPUBLIC OF SOUTH AFRICA

# MARKING GUIDELINE

## NATIONAL CERTIFICATE

## PICTORIAL DRAUGHTING

## 12 April 2021

**This marking guideline consists of 7 pages.**

**NOTE: THE DRAWINGS IN THIS MARKING GUIDELINE ARE NOT TO SCALE. MARKERS MUST PLEASE PREPARE THEIR OWN TEMPLATES.**

Copyright reserved

**QUESTION 1**

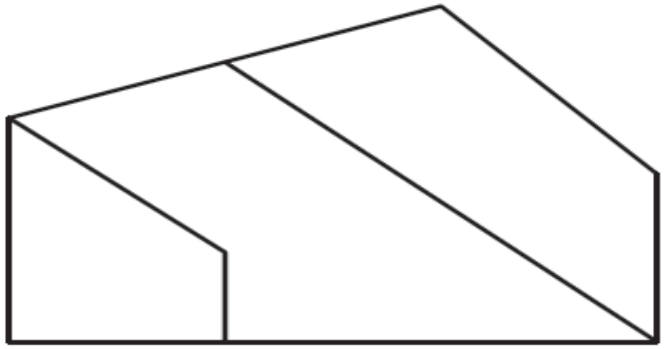

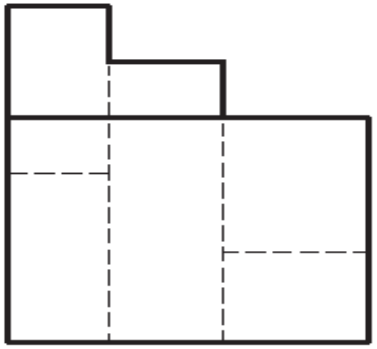

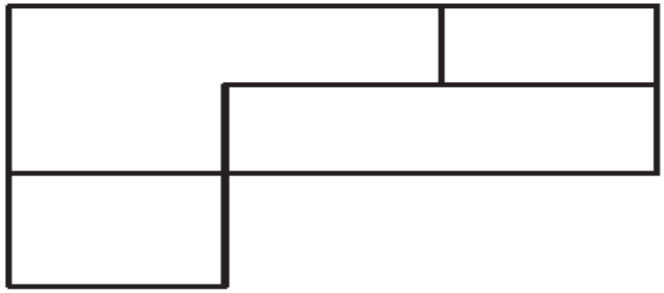

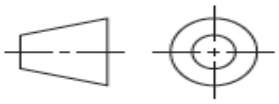

**FREEHAND DRAWING**

Proportion 7
Linework 4
Accuracy 2
Balanced layout/Neatness 1
TOTAL 14
**[14]**

Copyright reserved

## QUESTION 2

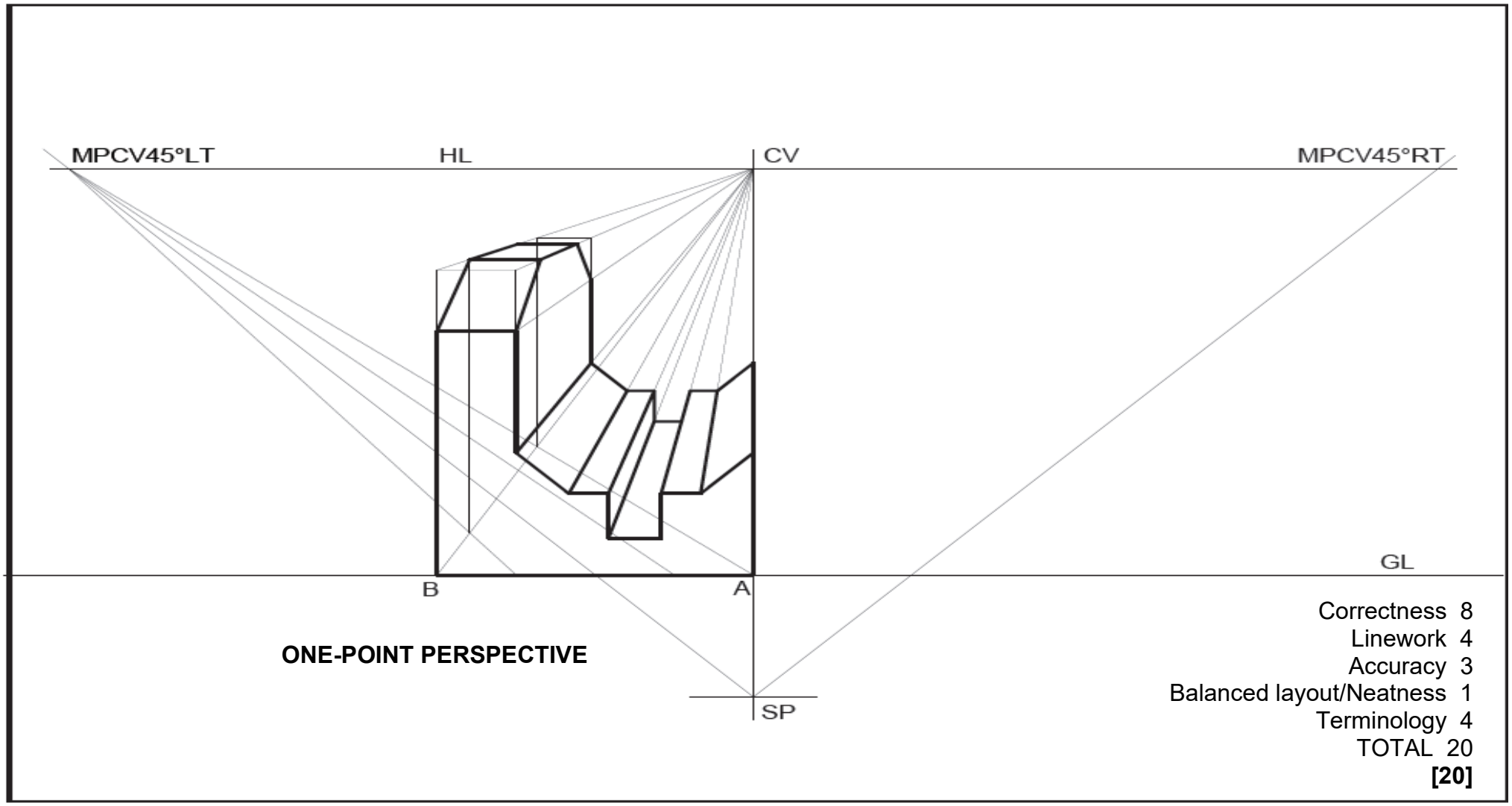


**ONE-POINT PERSPECTIVE**

Correctness 8
Linework 4
Accuracy 3
Balanced layout/Neatness 1
Terminology 4
TOTAL 20
**[20]**

Copyright reserved

**QUESTION 3**

Balanced layout/Neatness 2
TOTAL 20
**[20]**

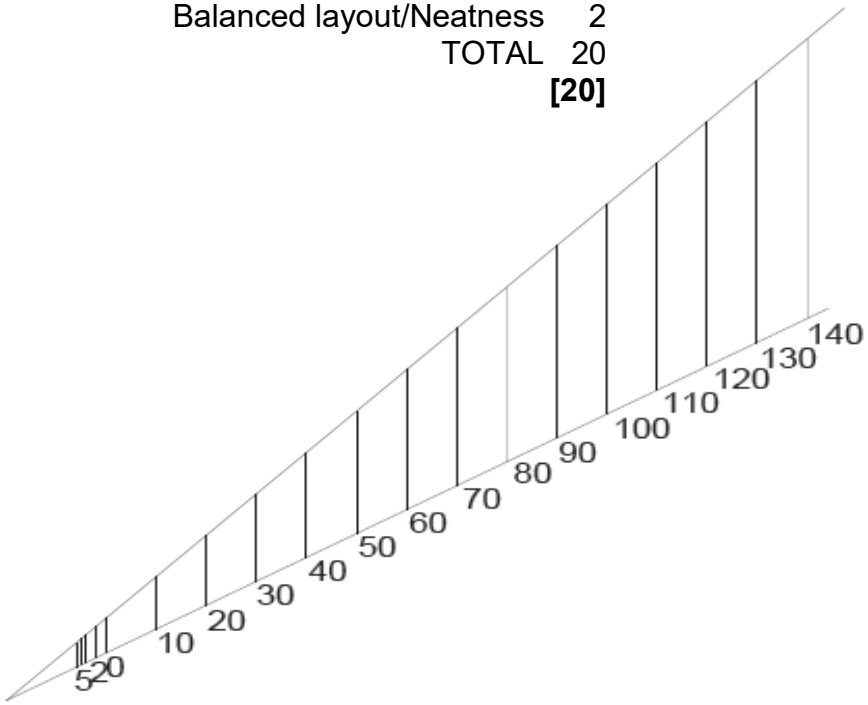


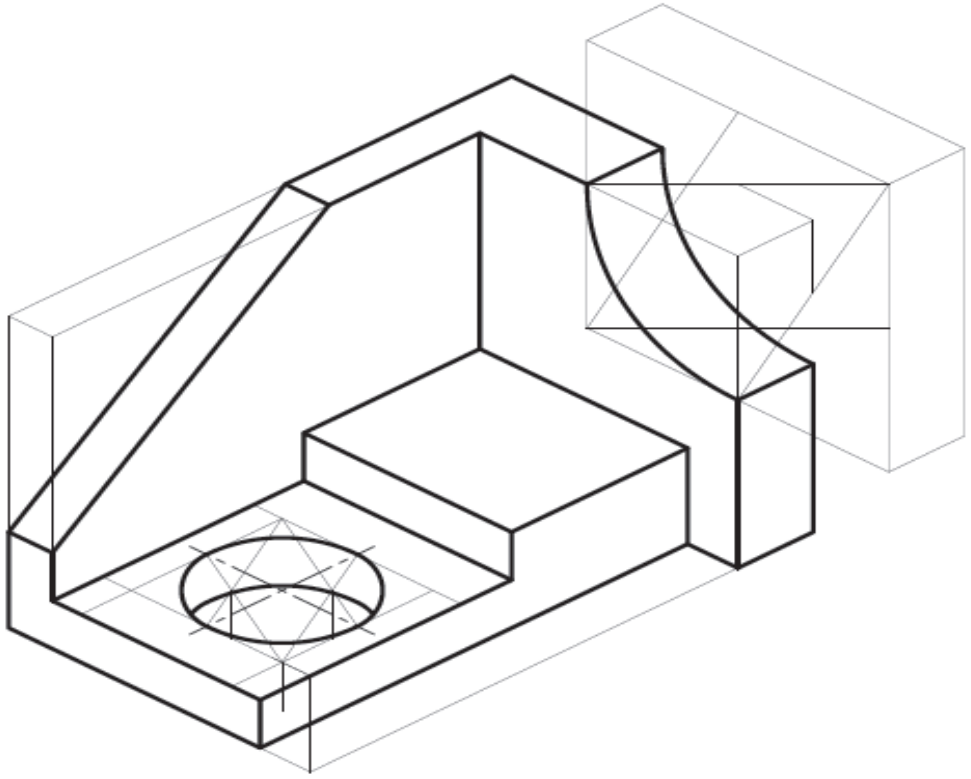

**ISOMETRIC PROJECTION**

Copyright reserved 

**QUESTION 4**

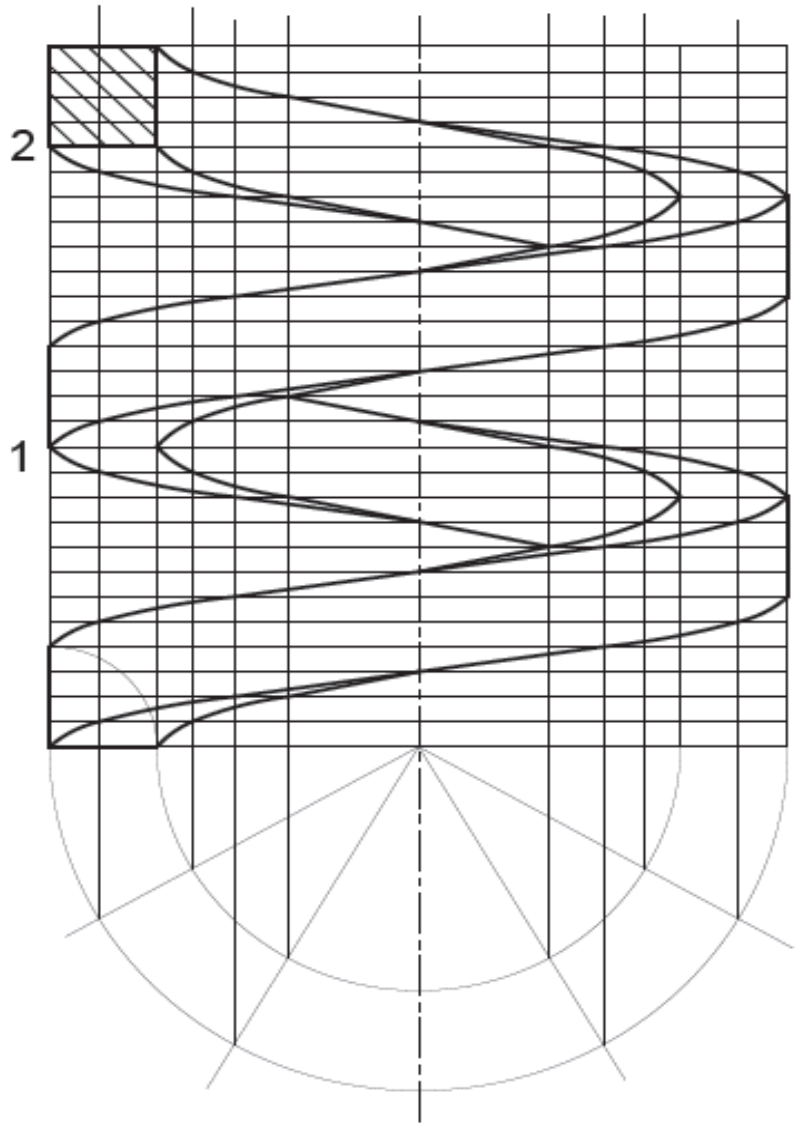


**SQUARE SPRING**

Correctness 7
Linework 4
Accuracy 2
Balanced layout/Neatness 1
TOTAL 14
**[14]**

**QUESTION 5**

MOD = P.C.D./19
= 171/19
= 9

C.P. = 3,142 X M
= 3,142 X 9
= 28,278

TT = 28,278/2
= 14,139

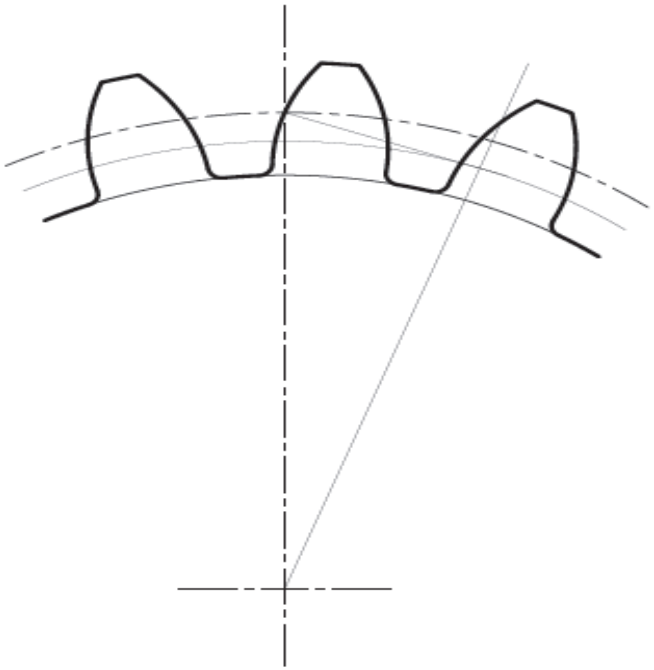

**GEAR TOOTH CONSTRUCTION**

Correctness 5
Linework 2,5
Accuracy 1,5
Balanced layout/Neatness 1
Construction and calculations 4
TOTAL 14

**[14]**

Copyright reserved

**QUESTION 6**

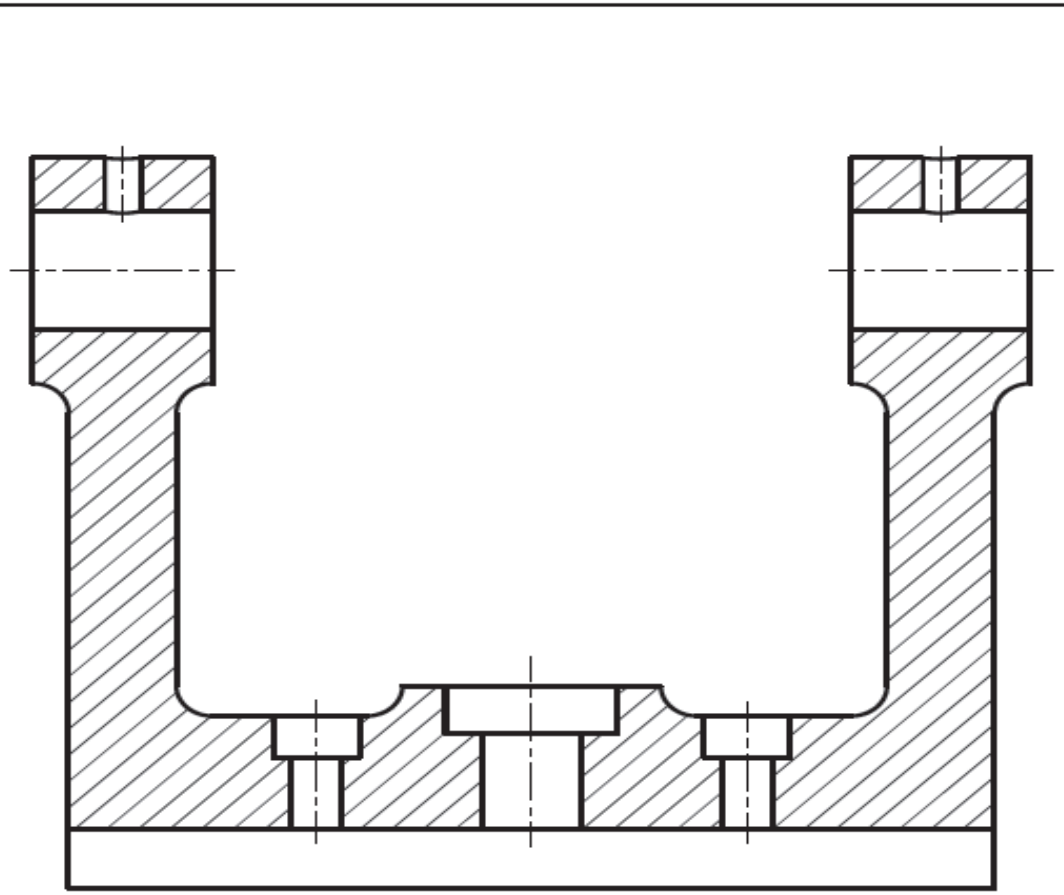

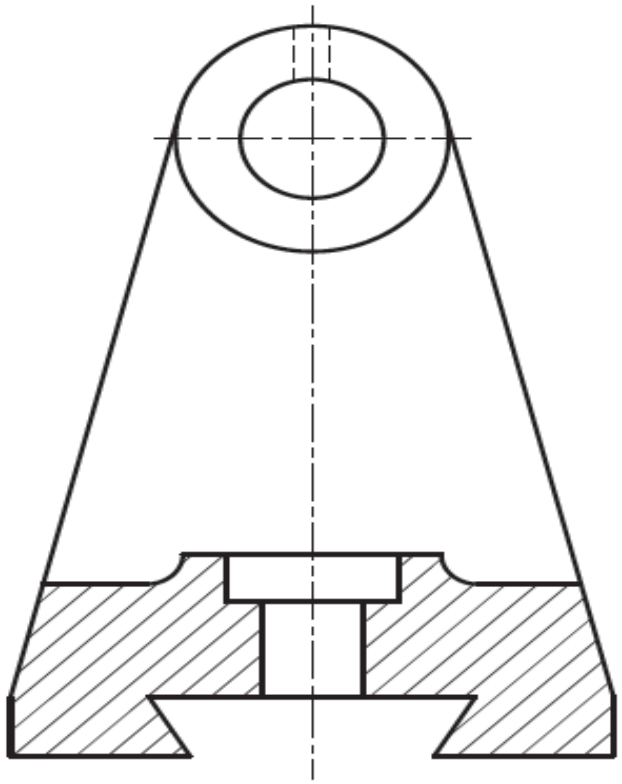

Correctness: 9
Linework: 4
Accuracy: 3
Balanced layout/Neatness: 2
TOTAL: 18
**[18]**

**INK PEN DRAWING**

**TOTAL**: **100**

Copyright reserved