higher education & training

Department:
Higher Education and Training
REPUBLIC OF SOUTH AFRICA

T1280**(E)**(A4)T

NATIONAL CERTIFICATE: MULTI-DISCIPLINARY DRAWING OFFICE PRACTICE

PICTORIAL DRAUGHTING

(8090214)

4 April 2019 (X-Paper)
09:00–13:00

CLOSED-BOOK EXAMINATION

REQUIREMENTS: **ONE sheet of A4 draughting film or gateway tracing paper**
ONE A2 drawing sheet

This question paper consists of 4 pages, 6 diagram sheets and 1 formula sheet.

Copyright reserved

DEPARTMENT OF HIGHER EDUCATION AND TRAINING
REPUBLIC OF SOUTH AFRICA

NATIONAL CERTIFICATE: MULTI-DISCIPLINARY DRAWING OFFICE PRACTICE
PICTORIAL DRAUGHTING
TIME: 4 HOURS
MARKS: 100

INSTRUCTIONS AND INFORMATION

1. Answer ALL the questions.
2. Read ALL the questions carefully.
3. Number the answers according to the numbering system used in this question paper.
4. Use both sides of the A2 DRAWING SHEET and answer QUESTIONS 1, 2 and 3 on the front and QUESTIONS 4 and 5 on the reverse side. Answer QUESTION 6 on the A4 DRAUGHTING FILM.
5. Draw a 15 mm border around the DRAWING SHEET (on both sides).
6. Complete ALL drawing work, including candidate information, in pencil on the A2 DRAWING SHEET and in draughting ink on the A4 DRAUGHTING FILM.
7. ALL drawing work must comply with the SABS 0111-1990 Code of Practice.
8. On completion, fold the A2 DRAWING SHEET to A3 size with the EXAMINATION NUMBER visible on the front. Place the A4 DRAUGHTING FILM inside the folded A2 DRAWING SHEET. Do NOT use staples.
9. Use your discretion for dimensions NOT given.
10. Use a 3 m fillet radius for ALL radii NOT given.
11. A balanced layout is very important and candidates will be penalised for poor planning.
12. Work neatly.

Copyright reserved

QUESTION 1: FREEHAND DRAWING

FIGURE 1, DIAGRAM SHEET 1 (attached), shows THREE views of a casting in first-angle orthographic projection.

Draw, freehand and to scale 2:1, a full-sectional left view of the given casting. Do NOT show any hidden details. Add any THREE dimensions on the completed drawing together with a suitable title and scale . **[14]**

QUESTION 2: TWO-POINT PERSPECTIVE DRAWING

FIGURE 2, DIAGRAM SHEET 2 (attached), shows TWO views of a guide block in first-angle orthographic projection.

Draw, to scale 1:1 and by using the measure-point method, a two-point perspective drawing of the guide block. Point A is situated on the ground line (GL) in line with the centre of vision (CV) and up against the picture plane (PP). Line AB vanishes to the right at 45°. The distance of the eye in front of the picture plane (PP) is 130 mm and the height of the eye above the ground line (GL) is 100 mm. (16)

Show ALL necessary points on the construction, for example CV, VPs, etcetera. (4)
[20]

QUESTION 3: ISOMETRIC PROJECTION

FIGURE 3, DIAGRAM SHEET 3 (attached), shows TWO views of an anchor block in third-angle orthographic projection. Do NOT copy the given views, but construct a suitable isometric scale.

Draw, to scale 1:1, an isometric projection of the anchor block. (2)

Only show the hidden detail of the hole through the block. Do NOT show any other hidden detail. Do NOT insert any dimensions. (18)
[20]

QUESTION 4: SQUARE-THREAD CONSTRUCTION

FIGURE 4, DIAGRAM SHEET 4 (attached), shows a single view of a workpiece with TWO ends threaded as shown. Part A has a left-hand square thread and part B a right-hand square thread.

Do NOT copy the given drawing but draw, to scale 4:1 and in a vertical position, a detail of only part A to show the true form of the square thread with TWO left-hand turns of the square thread according to the specifications provided on the drawing. Show ALL construction lines on the drawing. Do NOT show any hidden detail or calculations. **[14]**

Copyright reserved

QUESTION 5: GEAR-TEETH CONSTRUCTION

FIGURE 5, DIAGRAM SHEET 5 (attached), shows a pictorial view of a rack and pinion made of mild steel.

Do NOT copy the given drawing, but draw, to scale 2:1, an outside left view as shown in the direction of the arrow marked A to show TWO complete teeth of the pinion constructed according to an approximate method. The remainder of the gear is to be drawn according to conventional representation and the keyway must be drawn using empirical values.

HINT: Use D/4 and D/12 to obtain the keyway size. (10)

Show ALL construction lines, calculations and keyway part on the DRAWING SHEET. (4)
[14]

QUESTION 6: INK DRAWING

FIGURE 6, DIAGRAM SHEET 6 (attached), shows a full-sectional front view of a pulley assembly.

Draw, with ink pens and to scale 1:1, the given full-sectional front view of the pulley assembly. Do NOT show any hidden detail. Insert only TWO dimensions on the completed drawing: one diametrical dimension and one linear dimension. Print a suitable title and scale below the completed drawing. **[18]**

TOTAL: 100

Copyright reserved

DIAGRAM SHEET 1: FREEHAND DRAWING

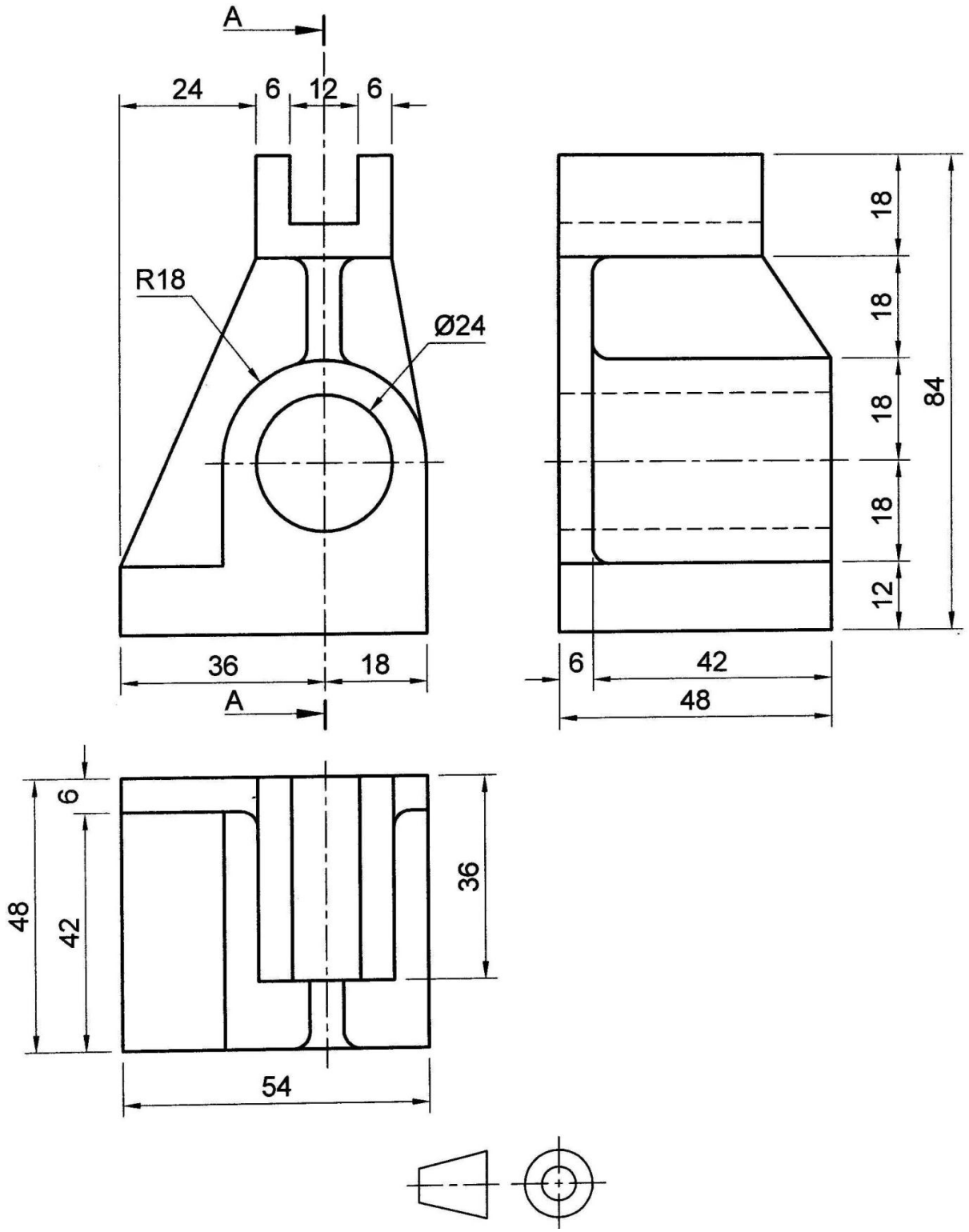

FIGURE 1

Copyright reserved

DIAGRAM SHEET 2: TWO-POINT PERSPECTIVE

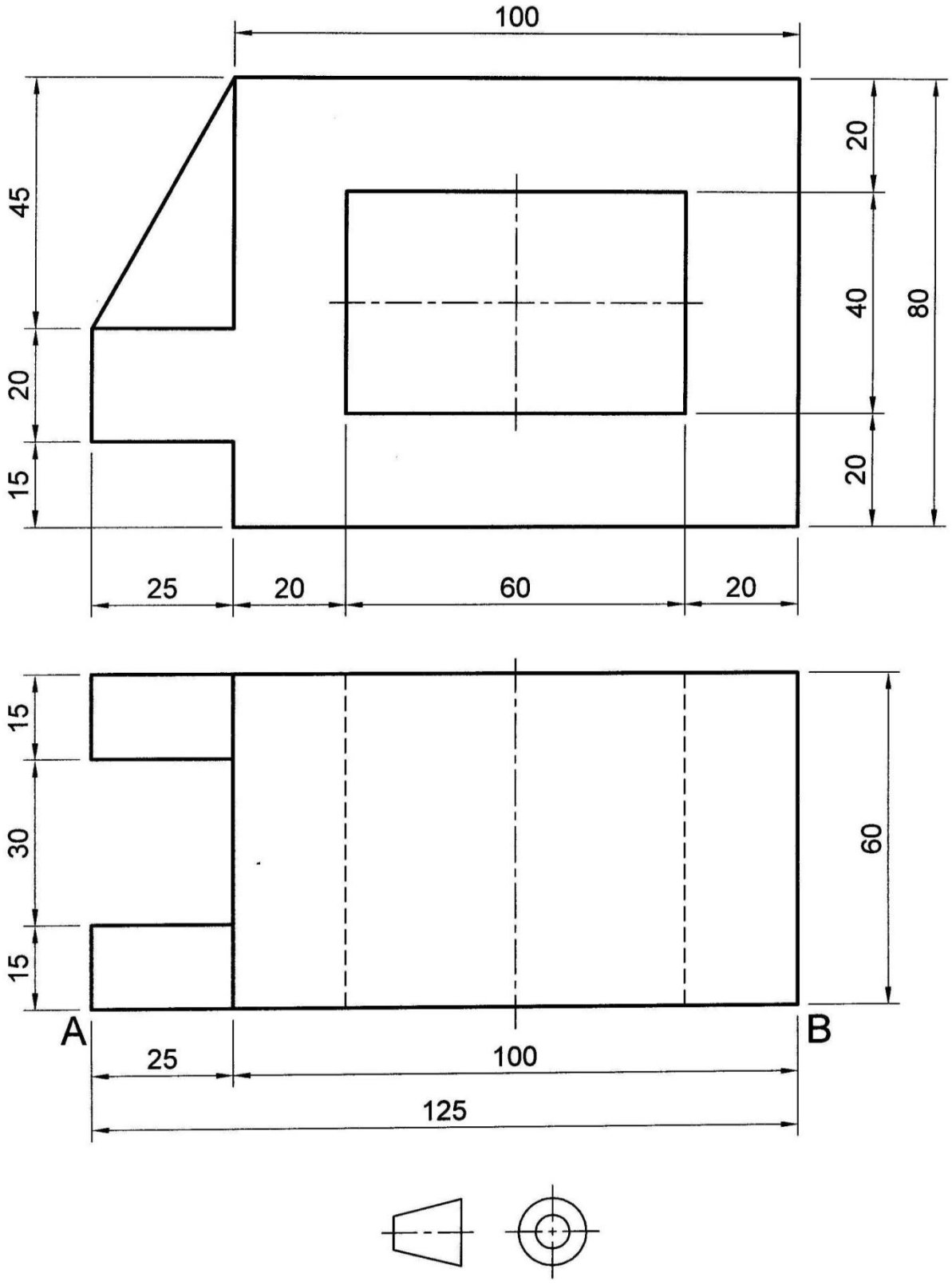

FIGURE 2

Copyright reserved

DIAGRAM SHEET 3: ISOMETRIC PROJECTION

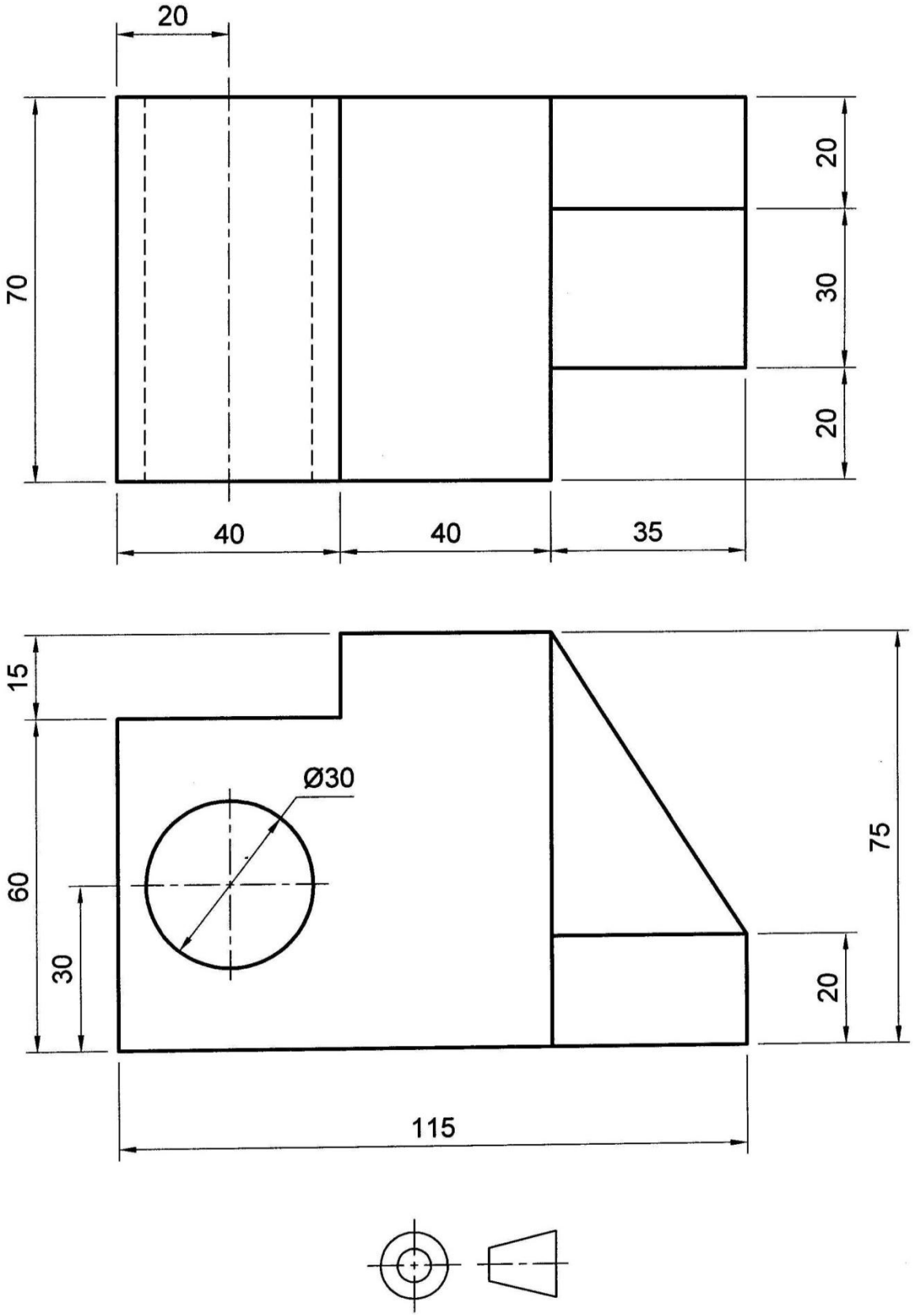

FIGURE 3

DIAGRAM SHEET 4: SQUARE-THREAD CONSTRUCTION

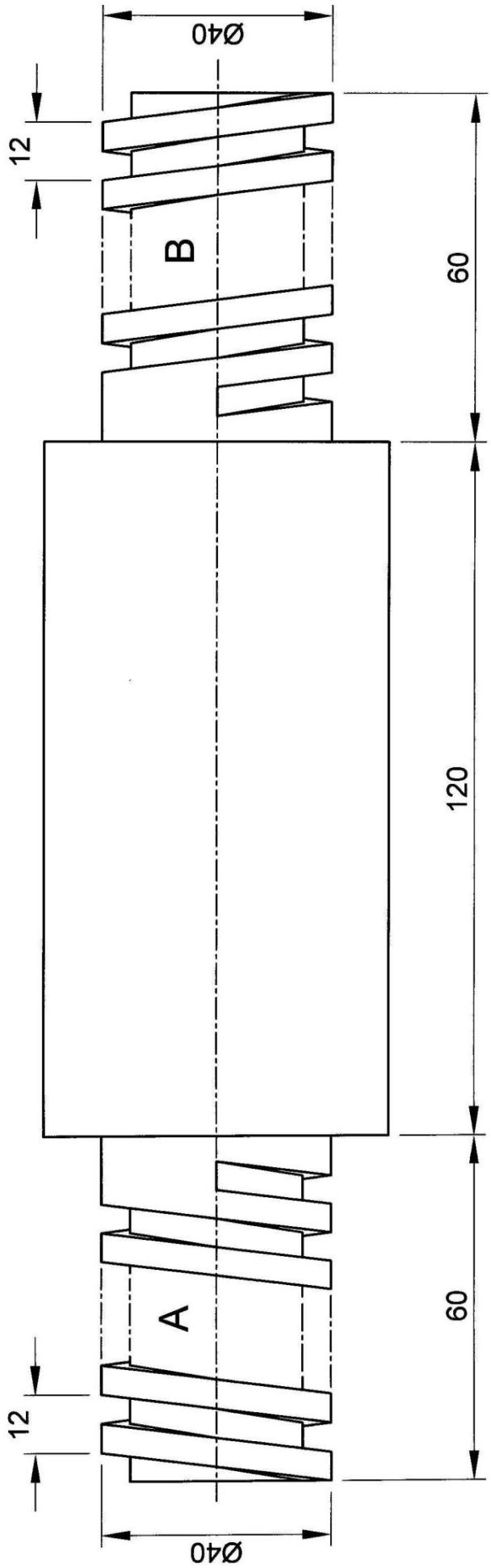

Copyright reserved

FIGURE 4

DIAGRAM SHEET 5: GEAR-TEETH CONSTRUCTION

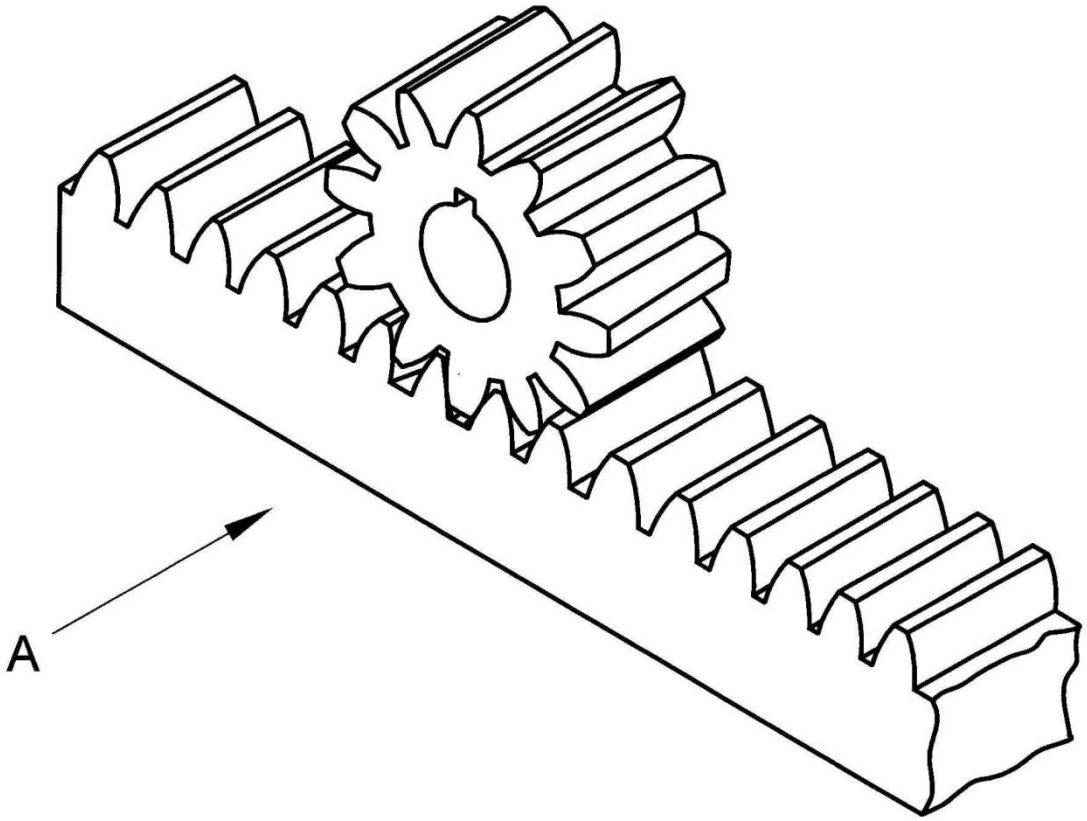

DD = 4 mm
DED = 5 mm
PCD = Ø72 mm
HOLE = Ø15 mm

SCALE 2:1

FIGURE 5

DIAGRAM SHEET 6: INK DRAWING

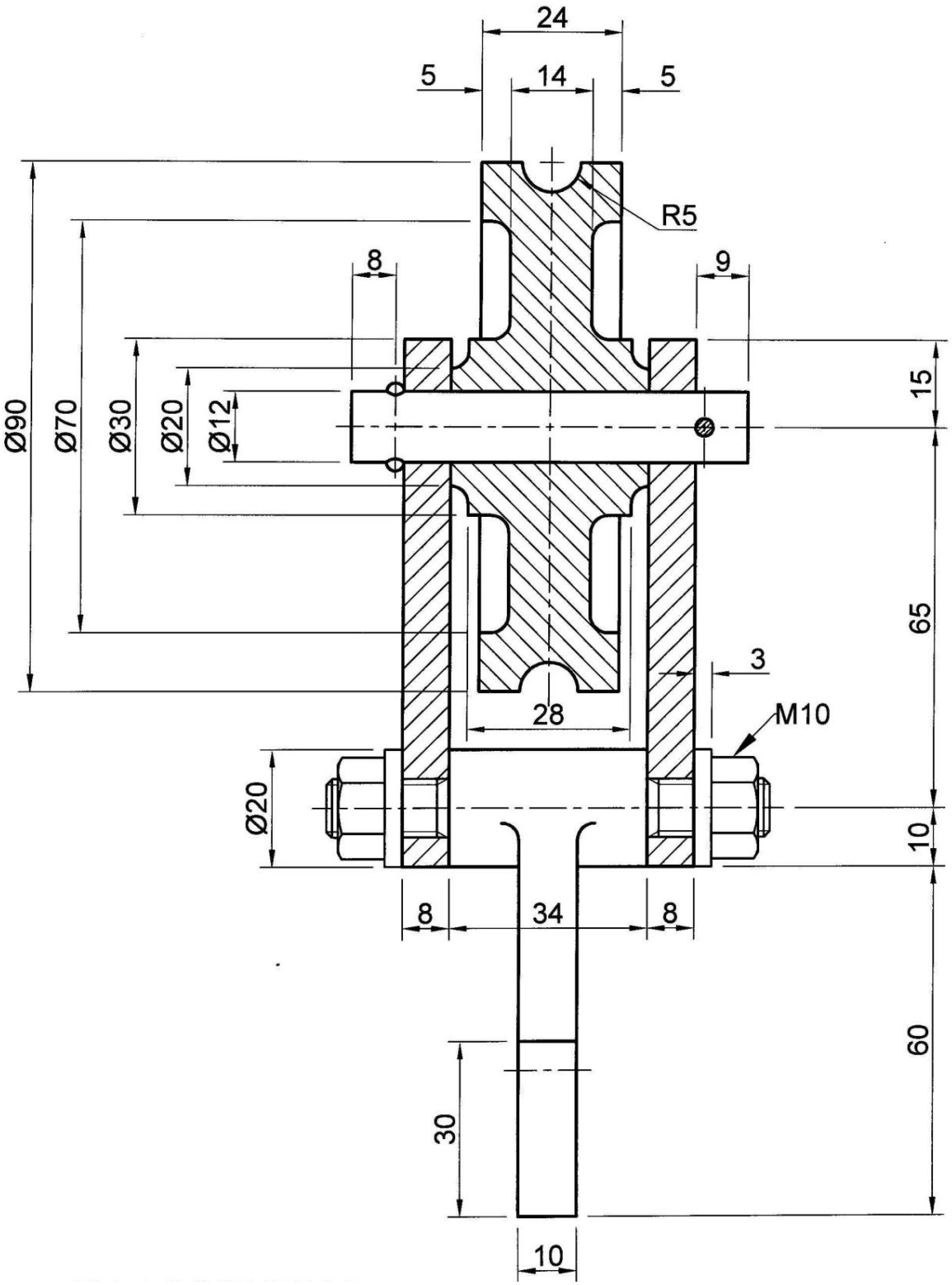

PULLEY ASSEMBLY

FIGURE 6

Copyright reserved

FORMULA SHEET

1. SCREW-THREAD CONSTRUCTION

Length = (pitch × number of turns) + pitch/2

Pitch divisions = pitch/12

2. GEAR-TEETH CONSTRUCTION

Module = addendum

Dedendum = 1,25 × module

PCD = module × number of teeth

Fillet radius = 0,3 × module

Circular pitch = 3,142 × module

3. SQUARE-SPRING CONSTRUCTION

Length = (lead × number of turns) + material thickness

Copyright reserved