higher education & training

Department:
Higher Education and Training
REPUBLIC OF SOUTH AFRICA

MARKING GUIDELINE

NATIONAL CERTIFICATE: MULTI-DISCIPLINARY DRAWING OFFICE PRACTICE

PICTORIAL DRAUGHTING

4 APRIL 2019

This marking guideline consists of 7 pages.

Copyright reserved

QUESTION 1: FREEHAND DRAWING

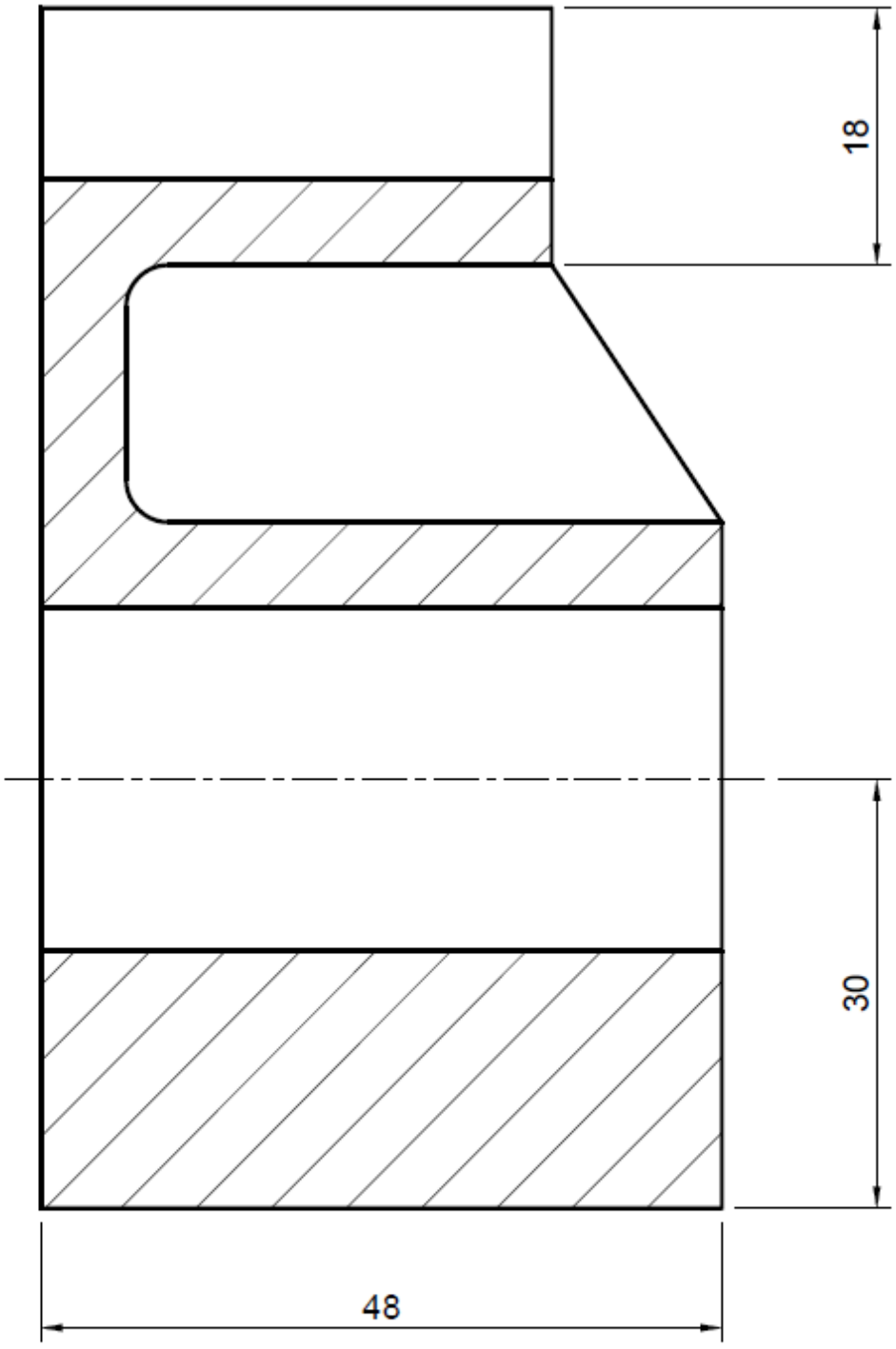

CASTING
SCALE 2:1

PROPORTION/PROPORSIE	= 7%
LINEWORK/LYNWERK	= 4%
ACCURACY/AKKURAATHEID	= 2%
BALANCE LAYOUT/NEATNESS GEBALANSEERDE UITLEG/NETHEID	= 1%

[14]

QUESTION 2: TWO-POINT PERSPECTIVE DRAWING

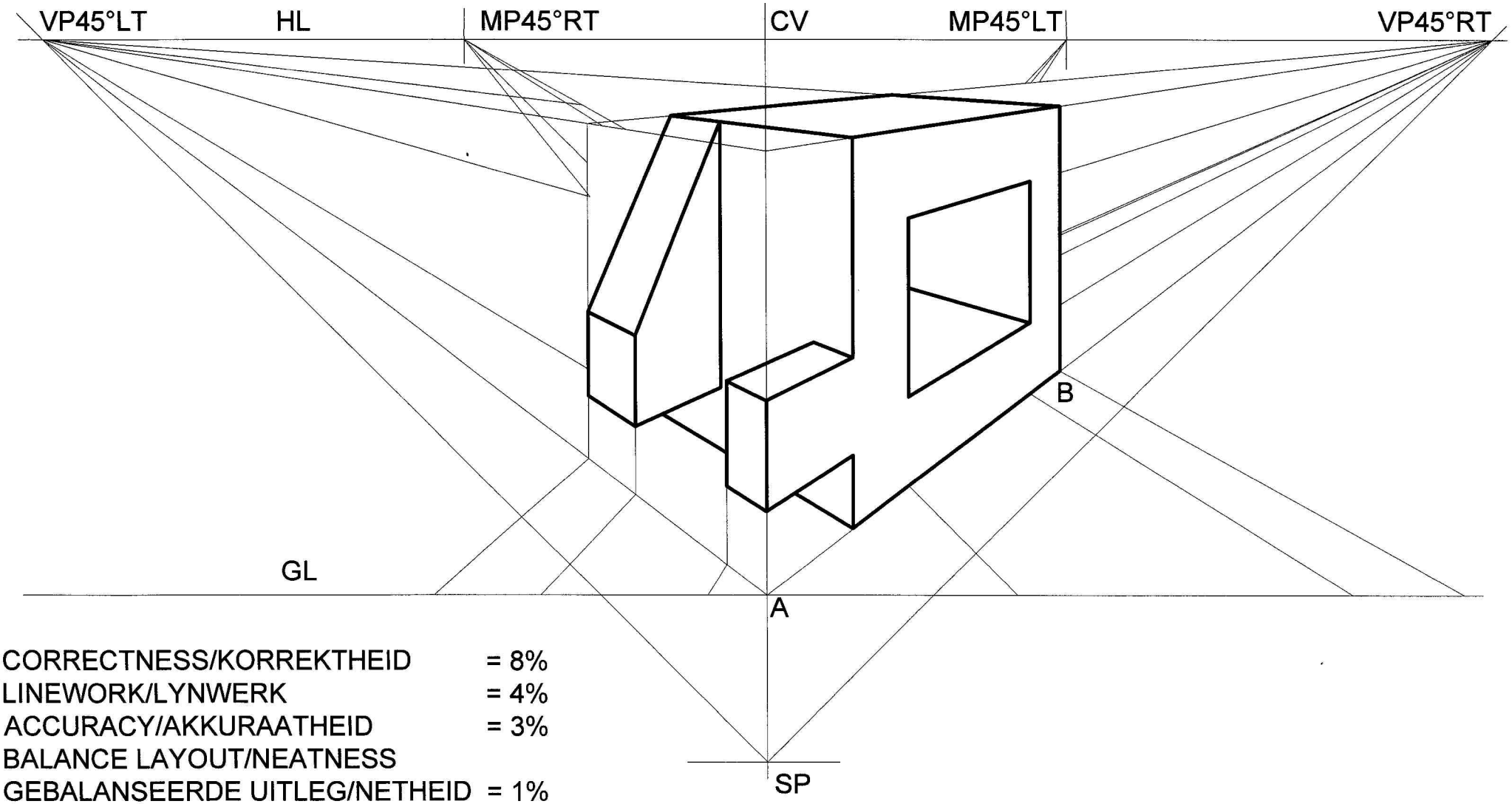

CORRECTNESS/KORREKTHEID	= 8%
LINEWORK/LYNWERK	= 4%
ACCURACY/AKKURAATHEID	= 3%
BALANCE LAYOUT/NEATNESS GEBALANSEERDE UITLEG/NETHEID	= 1%
TERMINOLOGY/TERMINOLOGIE	= 4%

[20]

Copyright reserved

QUESTION 3: ISOMETRIC PROJECTION

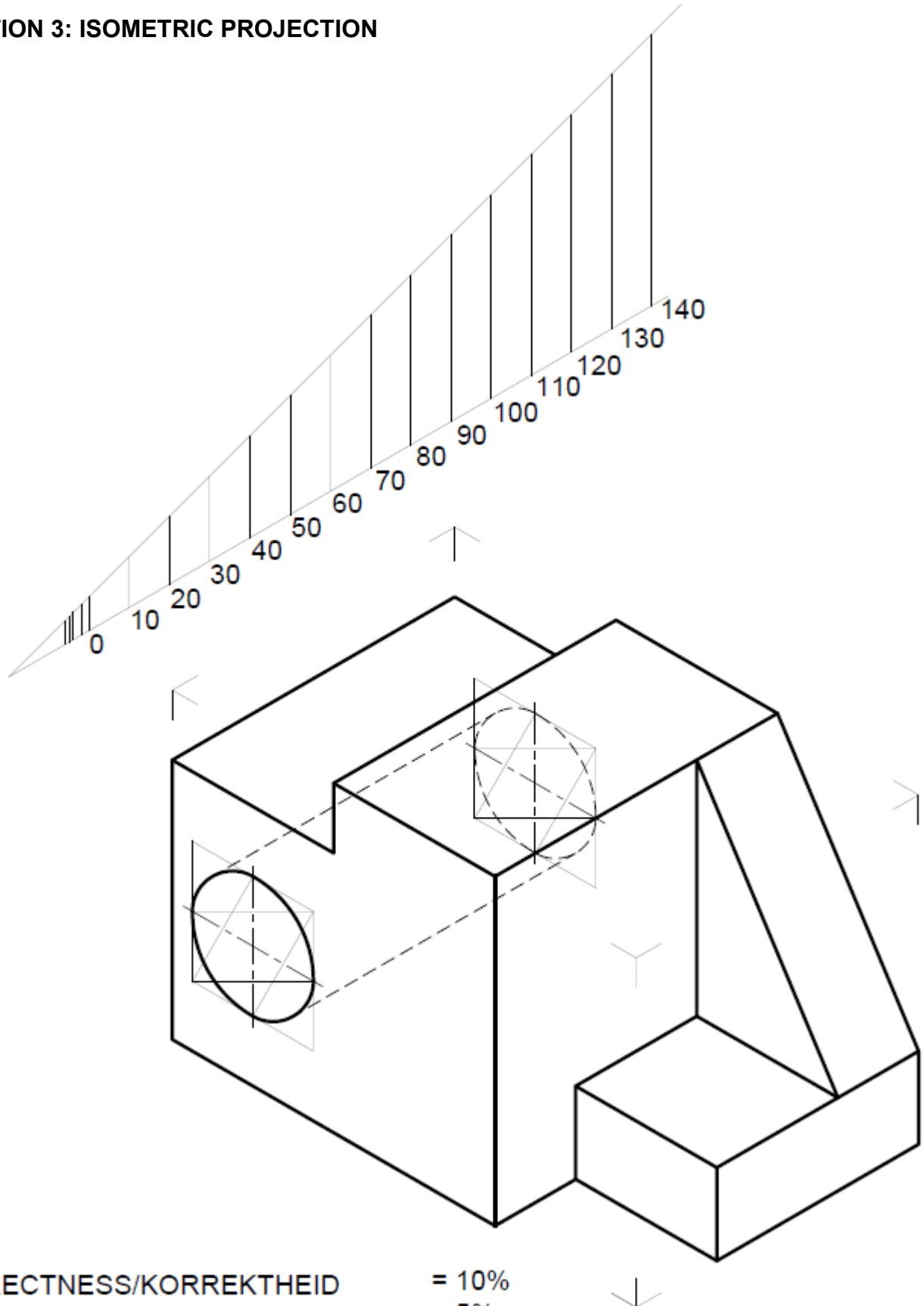

CORRECTNESS/KORREKTHEID	= 10%
LINEWORK/LYNWERK	= 5%
ACCURACY/AKKURAATHEID	= 3%
BALANCE LAYOUT/NEATNESS	= 2%

[20]

Copyright reserved

QUESTION 4: SQUARE-THREAD CONSTRUCTION

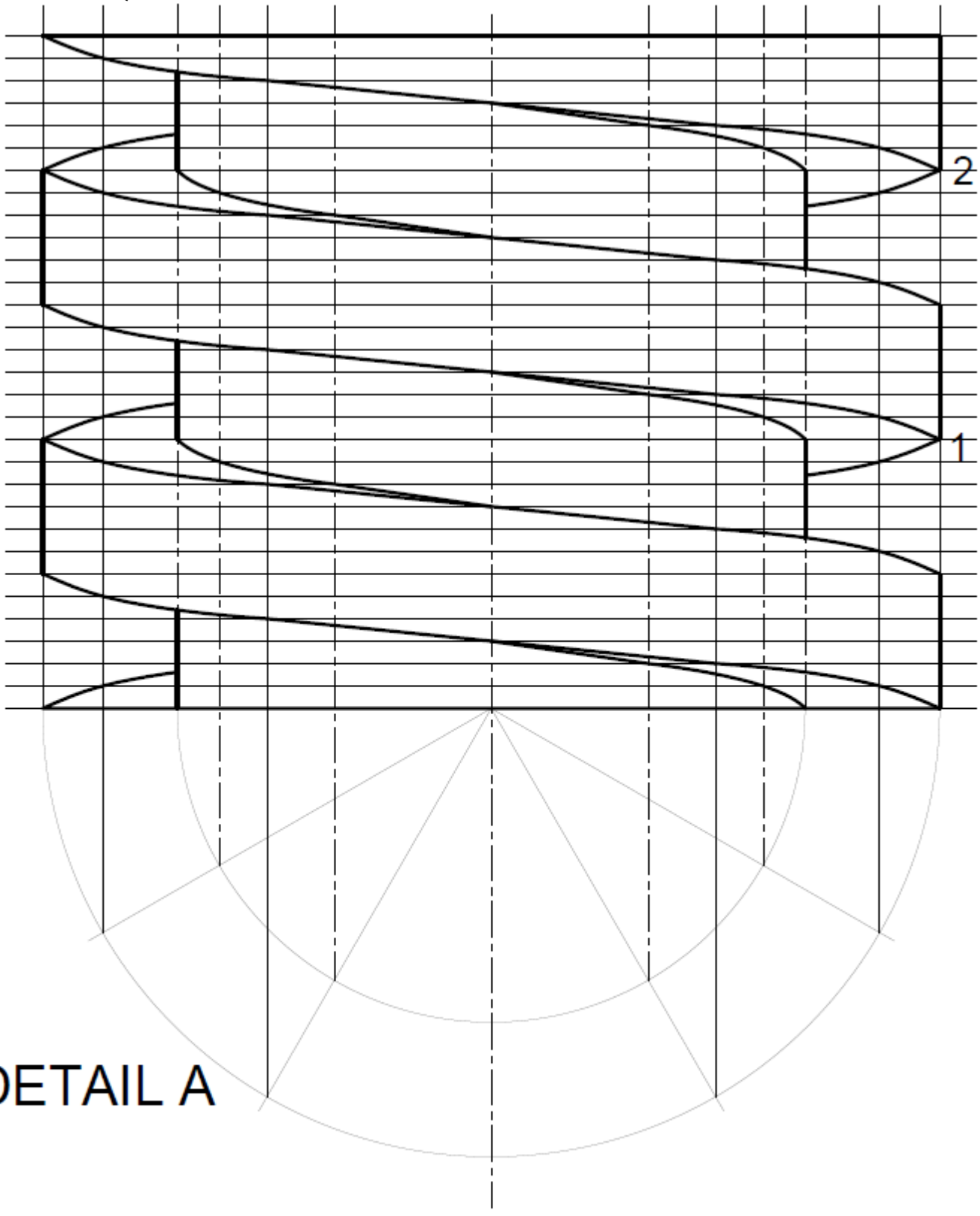

CORRECTNESS/KORREKTHEID	= 7%
LINEWORK/LYNWERK	= 4%
ACCURACY/AKKURAATHEID	= 2%
BALANCE LAYOUT/NEATNESS GEBALANSEERDE UITLEG/NETHEID	= 1%

[14]

Copyright reserved

QUESTION 5: GEAR-TEETH CONSTRUCTION

ADD = 4 x 2 = 8

C.P. = 3,142 x M
= 3,142 x 8
= 25,136

TT = 25,136/2
= 12,568

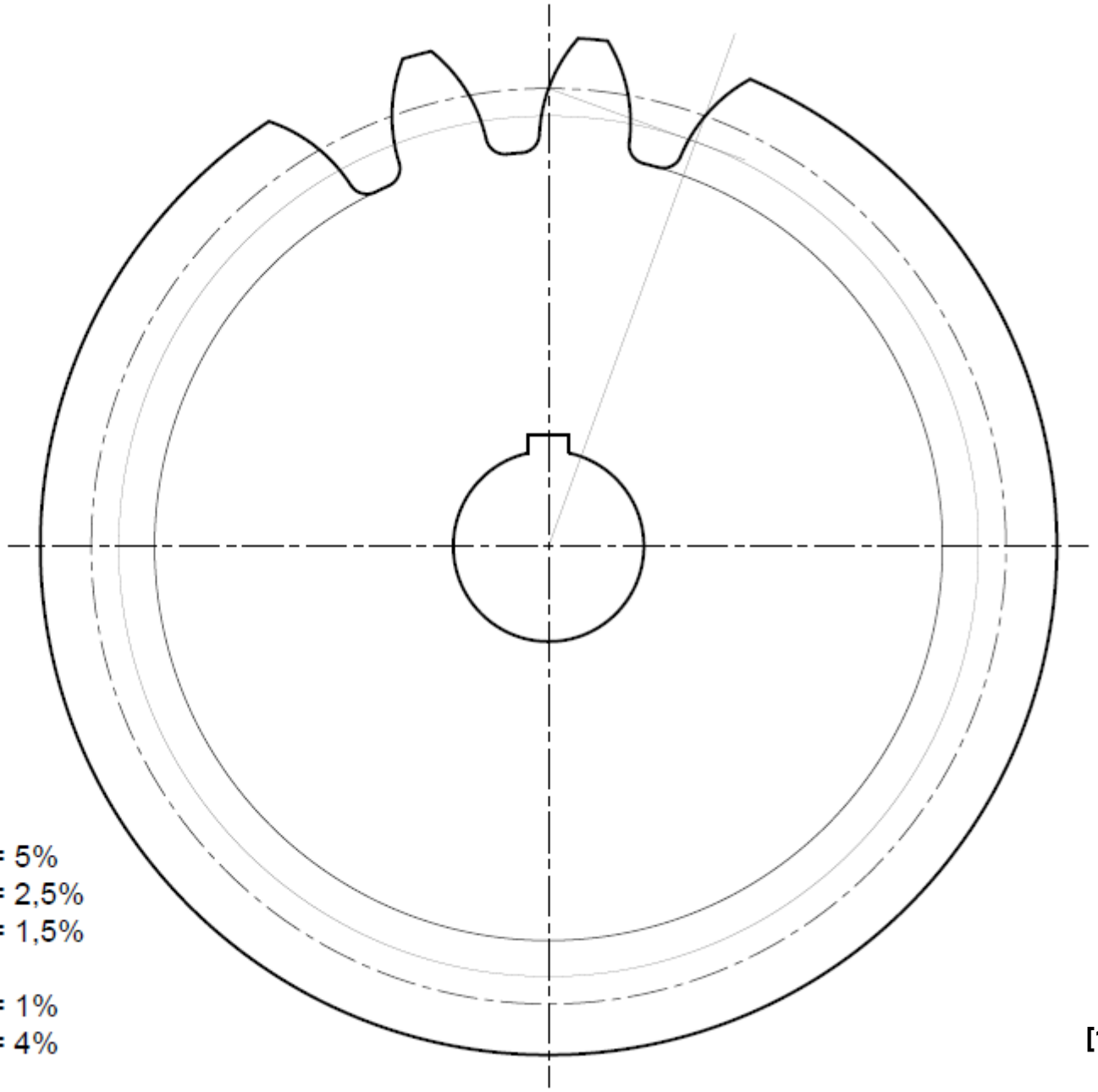

CORRECTNESS/KORREKTHEID	= 5%
LINEWORK/LYNWERK	= 2,5%
ACCURACY/AKKURAATHEID	= 1,5%
BALANCE LAYOUT/NEATNESS	
GEBALANSEERDE UITLEG/NETHEID	= 1%
CONSTR.& CALC./KONSTR.& BEREK.	= 4%

[14]

Copyright reserved

QUESTION 6: INK DRAWING

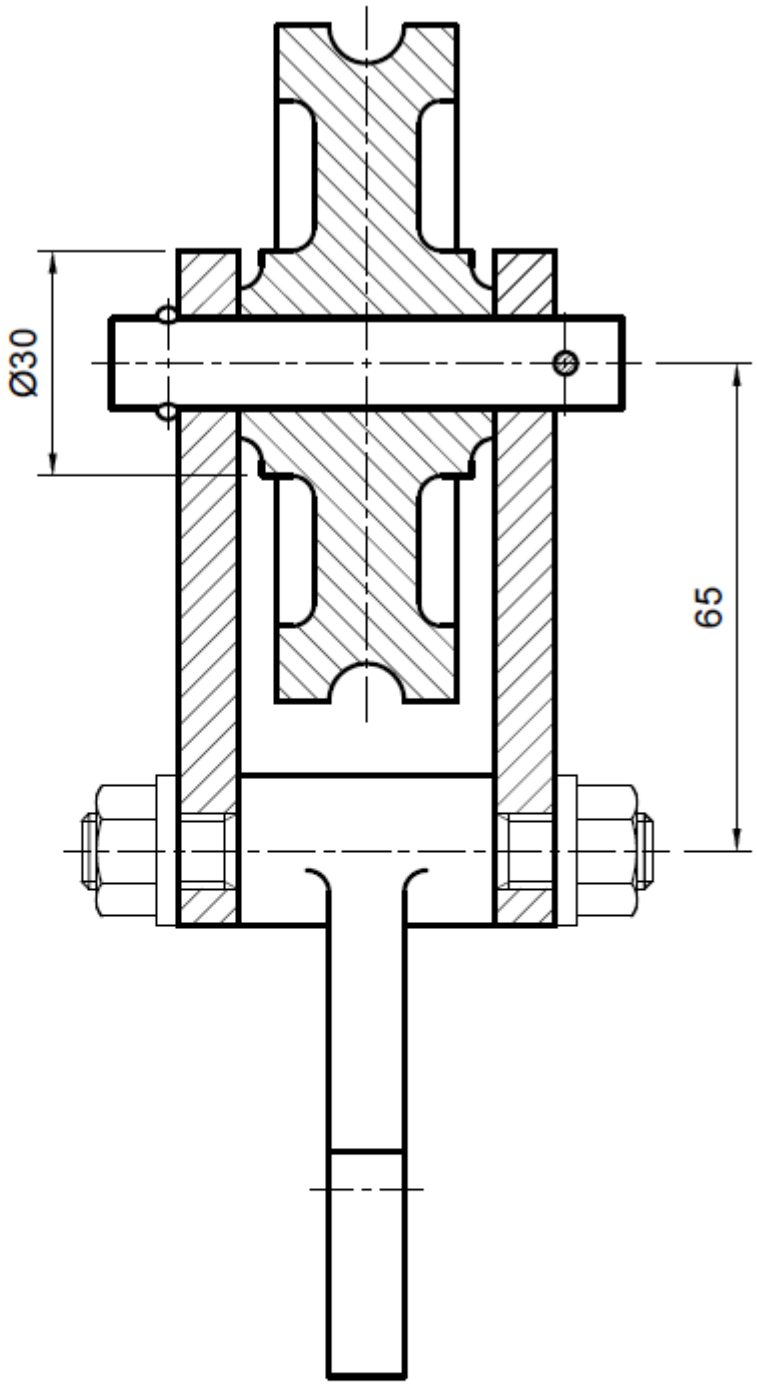

PULLEY ASSEMBLY

SCALE 1:1

CORRECTNESS/KORREKTHEID	= 9%
LINEWORK/LYNWERK	= 4%
ACCURACY/AKKURAATHEID	= 3%
BALANCE LAYOUT/NEATNESS GEBALANSEERDE UITLEG/NETHEID	= 2%

[18]

TOTAL: 100

Copyright reserved