higher education & training

Department:
Higher Education and Training
REPUBLIC OF SOUTH AFRICA

MARKING GUIDELINE

NATIONAL CERTIFICATE

PICTORIAL DRAUGHTING N4

5 APRIL 2018

This marking guideline consists of 7 pages.

Copyright reserved

QUESTION 1: FREEHAND DRAWING

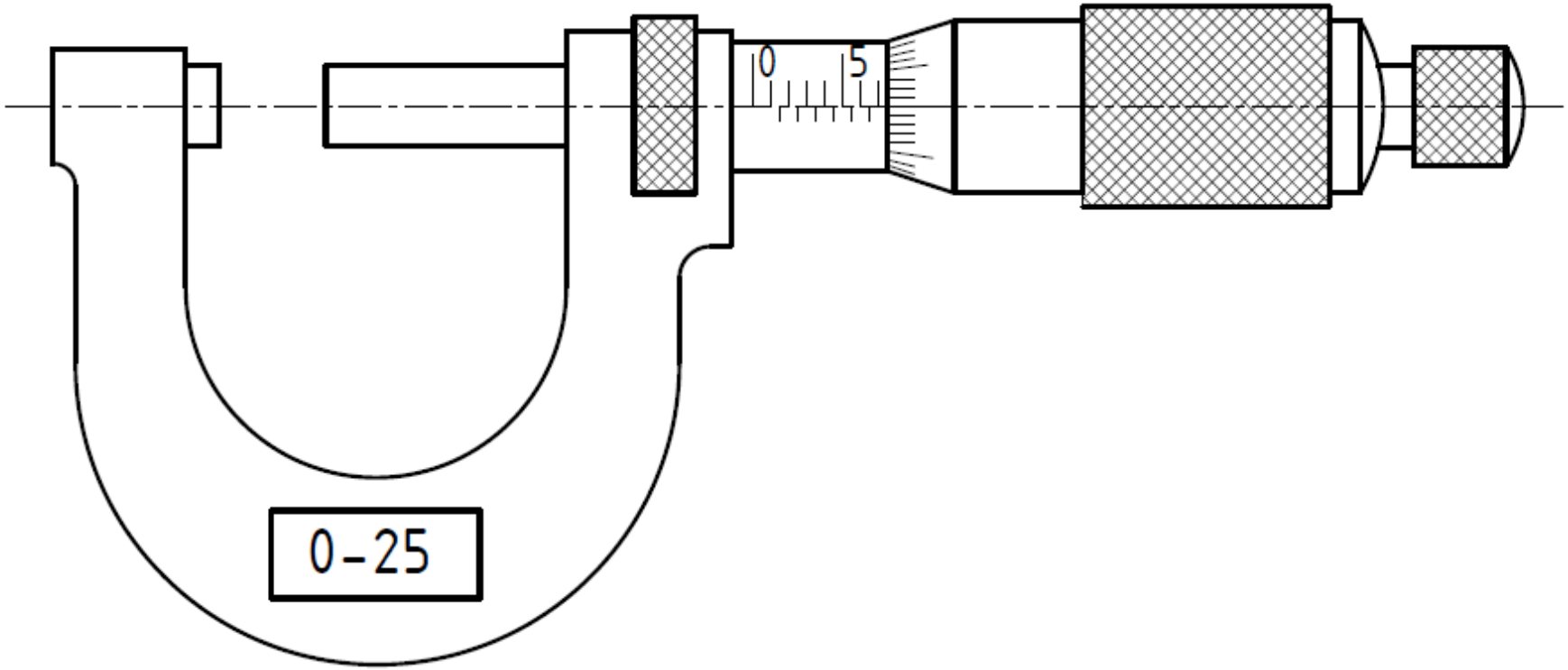

0-25 mm MICROMETER

Proportion	=	7
Line work	=	4
Accuracy	=	2
Balance layout/Neatness	=	1
TOTAL	=	**14**

Copyright reserved

QUESTION 2: ONE-POINT PERSPECTIVE DRAWING

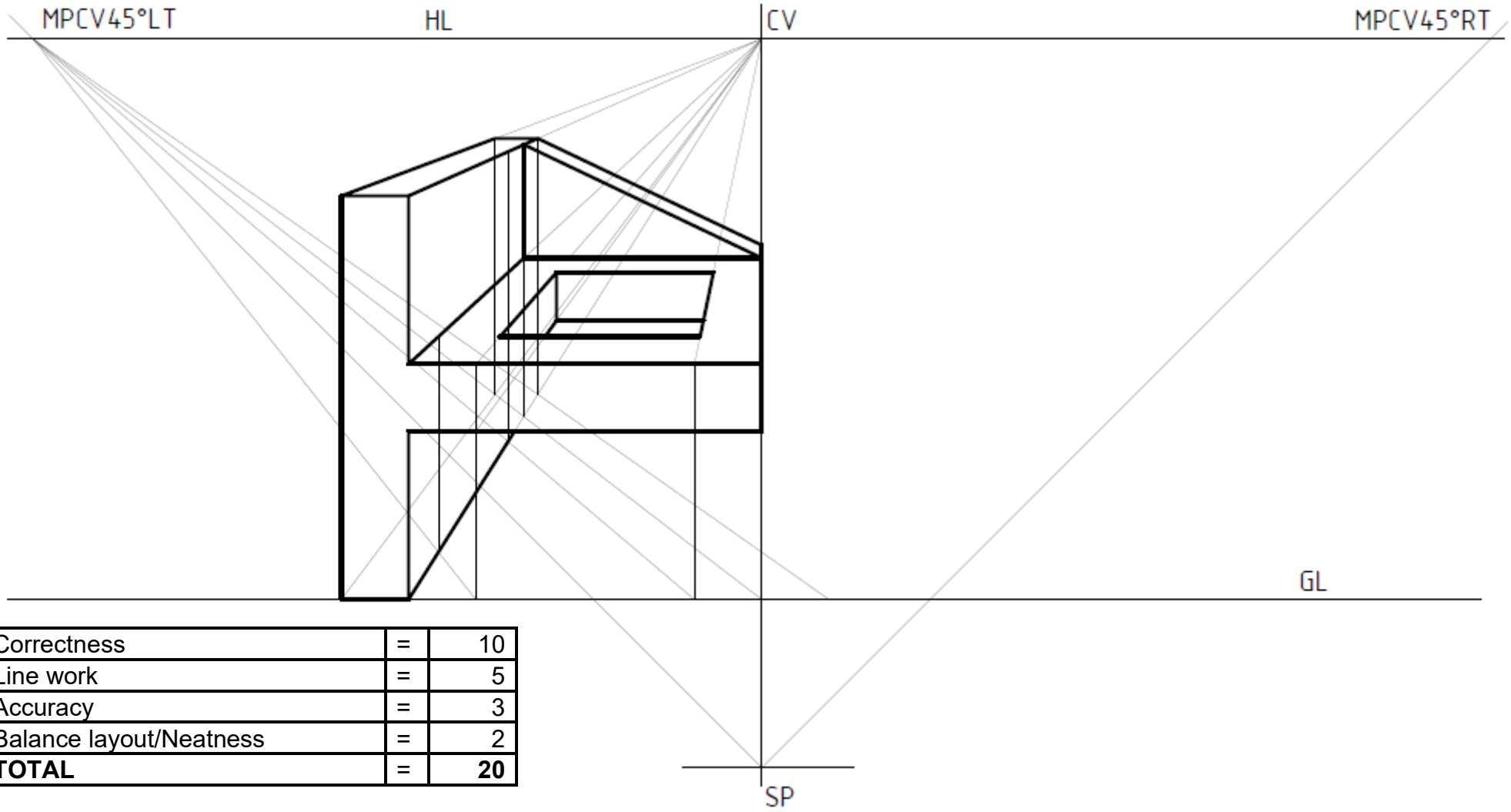

Correctness	=	10
Line work	=	5
Accuracy	=	3
Balance layout/Neatness	=	2
TOTAL	=	**20**

Copyright reserved

QUESTION 3: ISOMETRIC PROJECTION

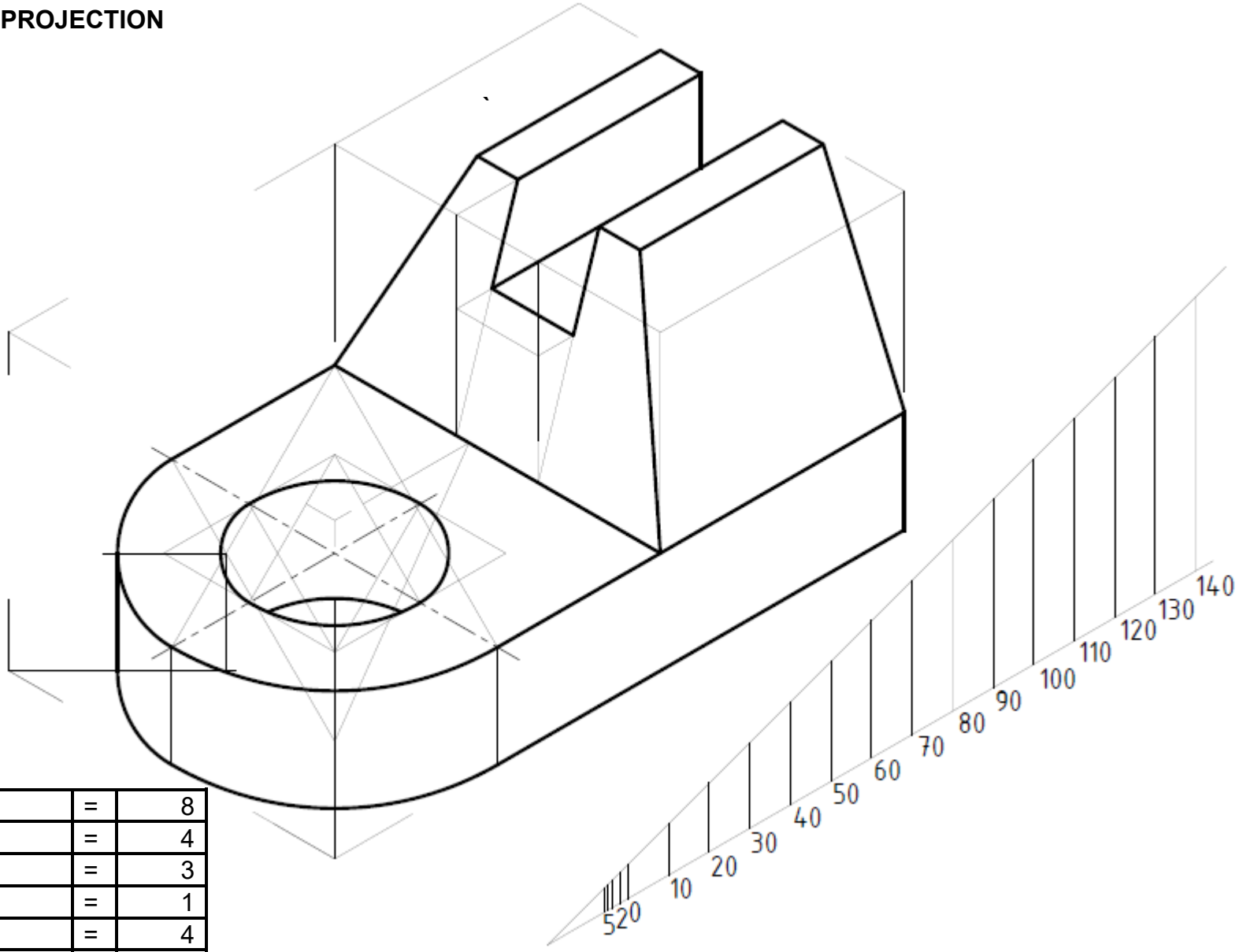

Correctness	=	8
Line work	=	4
Accuracy	=	3
Balance layout/Neatness	=	1
Terminology	=	4
TOTAL	=	**20**

Copyright reserved

QUESTION 4: SQUARE-THREAD CONSTRUCTION

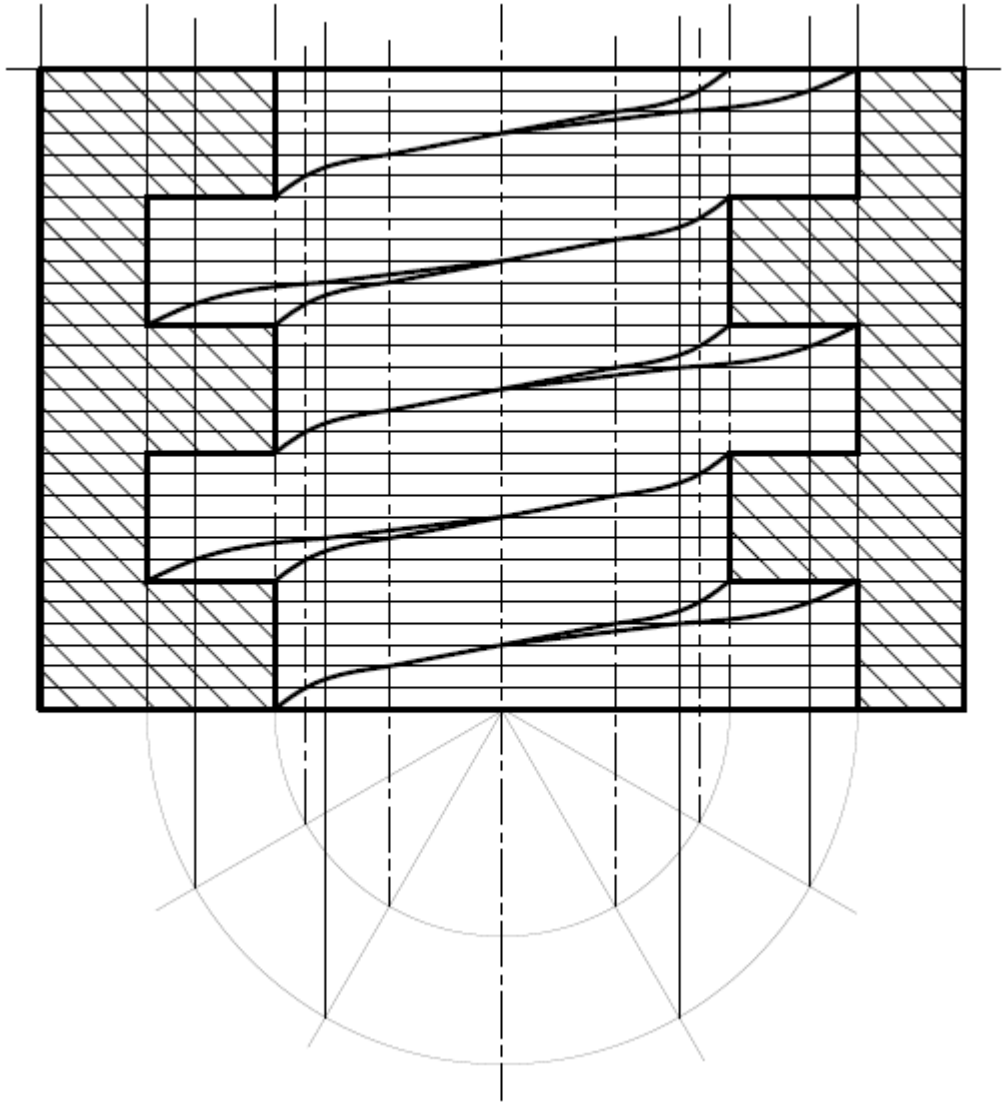

Correctness	=	5
Line work	=	2,5
Accuracy	=	1,5
Balance layout/Neatness	=	1
Construction and calculations	=	4
TOTAL	=	**14**

Copyright reserved

QUESTION 5: GEAR-TEETH CONSTRUCTION

MOD = (O.D. – P.C.D.)/2
= (120 – 110)/2
= 10/2
= 5

ADD = MODULE
= 5

C.P. = 3,142 X M
= 3,142 X 5
= 15,71

TT = 15,71/2
= 7.855

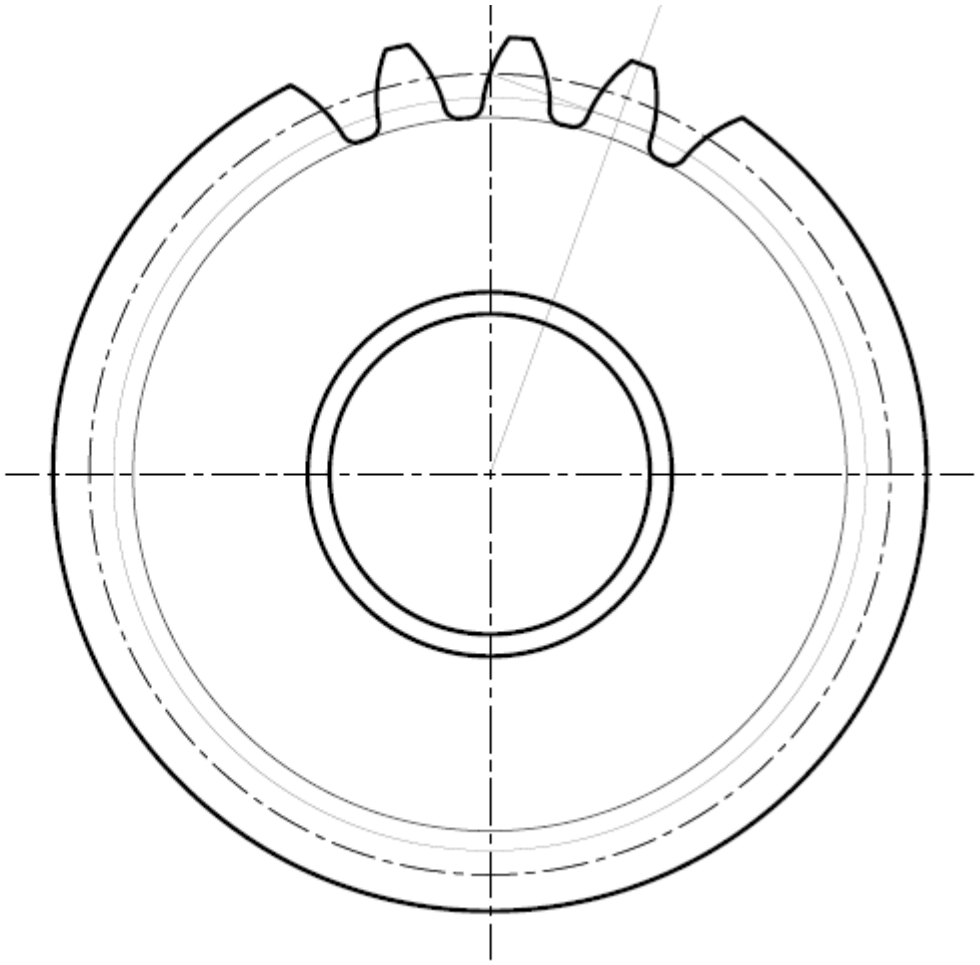

Correctness	=	7
Line work	=	4
Accuracy	=	2
Balance layout/Neatness	=	1
TOTAL	=	**14**

Copyright reserved

QUESTION 6: INK DRAWING

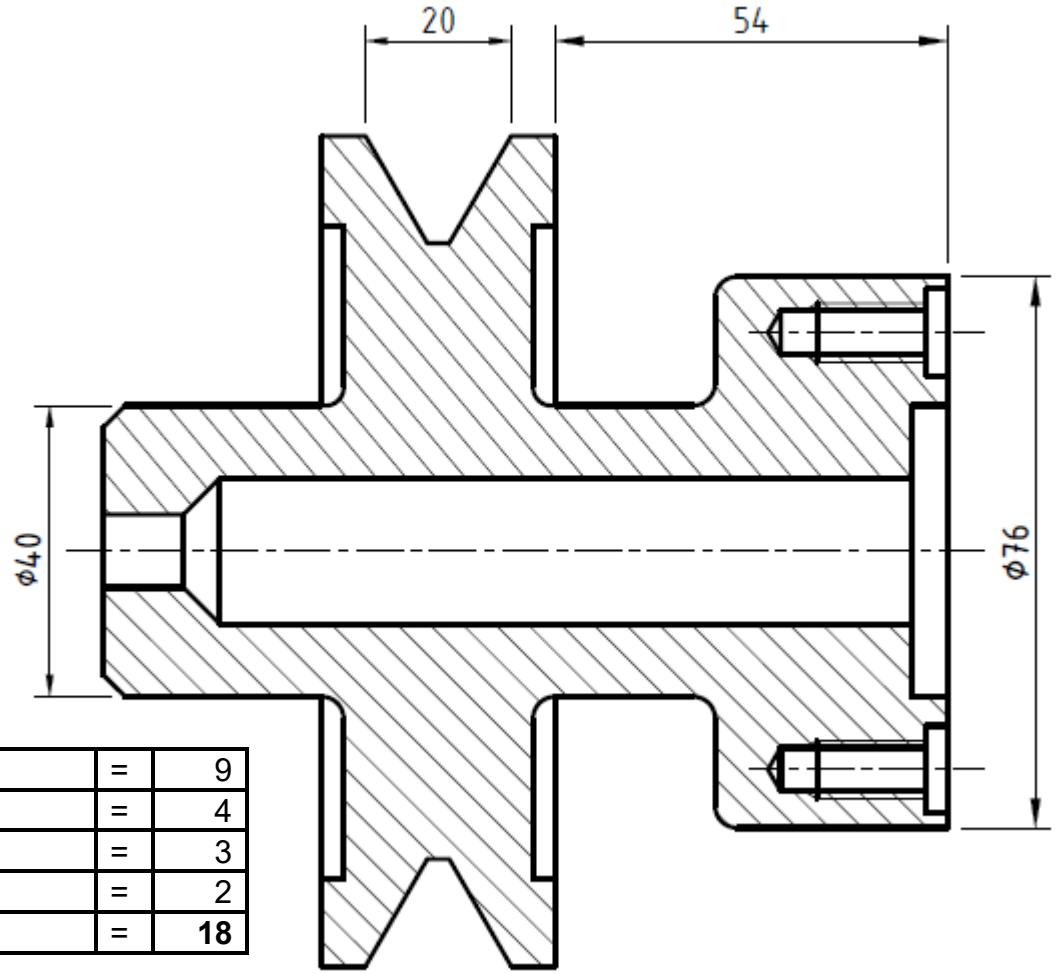

Correctness	=	9
Line work	=	4
Accuracy	=	3
Balance layout/Neatness	=	2
TOTAL	=	**18**

PULLEY

SCALE 1: 1

TOTAL: 100

Copyright reserved