higher education & training

Department:
Higher Education and Training
REPUBLIC OF SOUTH AFRICA

NATIONAL CERTIFICATE:
MULTIDISCIPLINARY DRAWING OFFICE PRACTICE

PICTORIAL DRAUGHTING

(8090214)

2 August 2021 (X-paper)
09:00–13:00

CLOSED-BOOK EXAMINATION

REQUIREMENTS: ONE A2 drawing sheet
ONE sheet of A4 draughting film or Gateway tracing paper

This question paper consists of 4 pages, 5 diagram sheets and 1 formula sheet.

154Q1G2102

Copyright reserved

DEPARTMENT OF HIGHER EDUCATION AND TRAINING
REPUBLIC OF SOUTH AFRICA

NATIONAL CERTIFICATE
PICTORIAL DRAUGHTING
TIME: 4 HOURS
MARKS: 100

INSTRUCTIONS AND INFORMATION

1. Answer all the questions.
2. Read all the questions carefully.
3. Use both sides of the DRAWING SHEET. Answer QUESTIONS 1, 2 and 3 on the front of the A2 DRAWING SHEET, QUESTIONS 4 and 5 on the reverse side of the A2 DRAWING SHEET and QUESTION 6 on the A4 DRAUGHTING FILM.
4. Draw a 15-mm border around both sides of the DRAWING SHEET.
5. Clearly indicate question numbers.
6. Complete all drawing work, including candidate information, in pencil on the A2 DRAWING SHEET and in draughting ink on the A4 DRAUGHTING FILM.
7. On completion, fold the A2 DRAWING SHEET to A4 size with the EXAMINATION NUMBER visible on the front. The DRAUGHTING FILM must be placed inside the folded A2 DRAWING SHEET. Do not use staples.
8. Use your discretion for dimensions not given.
9. Use a 3-mm fillet radius for all radii not given.
10. All drawing work must comply with the SABS 0111-1990 code of practice.
11. A balanced layout is very important and candidates will be penalised for poor planning.
12. Work neatly.

Copyright reserved

QUESTION 1: FREEHAND DRAWING

FIGURE 1, DIAGRAM SHEET 1 (attached) shows three views of a casting in first-angle orthographic projection.

Draw, freehand, to scale 2:1, a full-sectional left view of the given casting.

Do not show any hidden details.

Add any THREE dimensions to the completed drawing. Print a suitable title and the scale below the completed drawing.

SCALE 2:1 **[14]**

QUESTION 2: TWO-POINT PERSPECTIVE DRAWING

FIGURE 2, DIAGRAM SHEET 2 (attached) shows two views of a guide block in first-angle orthographic projection. Draw, by using the measure point method, a two-point perspective drawing of the guide block.

Point A is situated on the ground line (GL) in line with the centre of vision (CV) and up against the picture plane (PP). Line AB vanishes to the right at 45º. The distance of the eye in front of the picture plane (PP) is 130 mm and the height of the eye above the ground line (GL) is 100 mm. (16)

Show all the necessary points on the construction, for example CV, VPs, etc. (4)

SCALE 1:1

[20]

QUESTION 3: ISOMETRIC PROJECTION

FIGURE 3, DIAGRAM SHEET 3 (attached) shows two views of an anchor block in third-angle orthographic projection.

Do not copy the given views, but construct a suitable isometric scale. (2)

Draw an isometric projection of the anchor block. (18)

Do not show any hidden detail. Do not insert any dimensions.

SCALE 1:1

[20]

Copyright reserved

QUESTION 4: SQUARE-THREAD CONSTRUCTION

A screw with a single-start right-handed square thread has a nominal diameter of 140 mm and a root diameter of 92 mm. Draw, to scale 1:1, TWO full turns of this thread, showing the true helical curves. Show all the construction lines.

Do not show any hidden detail or calculations.

The drawing must be in a vertical position.

Show all construction lines on the drawing.

SCALE 1:1 **[14]**

QUESTION 5: GEAR-TEETH CONSTRUCTION

FIGURE 4, DIAGRAM SHEET 4 (attached) shows a front view of a driven gear made of mild steel. Do not copy the given drawing, but draw to scale 2:1 an outside right view to show TWO complete teeth of the gear constructed according to an approximate method.

The remainder of the gear is to be drawn according to the conventional representation. (10)

Show all construction lines, calculations and keyway parts on the drawing paper. (4)

HINT: Use D/4 and D/12 to obtain the keyway sizes.

SCALE 2:1

[14]

QUESTION 6: INK DRAWING

FIGURE 5, DIAGRAM SHEET 5 (attached) shows two views of a release valve.

Draw, with ink pens, according to scale 1:1, a full-sectional detail view of the body (Item 1) of the release valve.

Do not show any hidden detail. Use your own discretion for dimensions not given. Insert only TWO dimensions on the completed drawing: ONE diametrical dimension and ONE linear dimension. Print a suitable title and the scale below the completed drawing.

SCALE 1:1

[18]

TOTAL: 100

Copyright reserved

(8090214)

DIAGRAM SHEET 1 : FREEHAND DRAWING

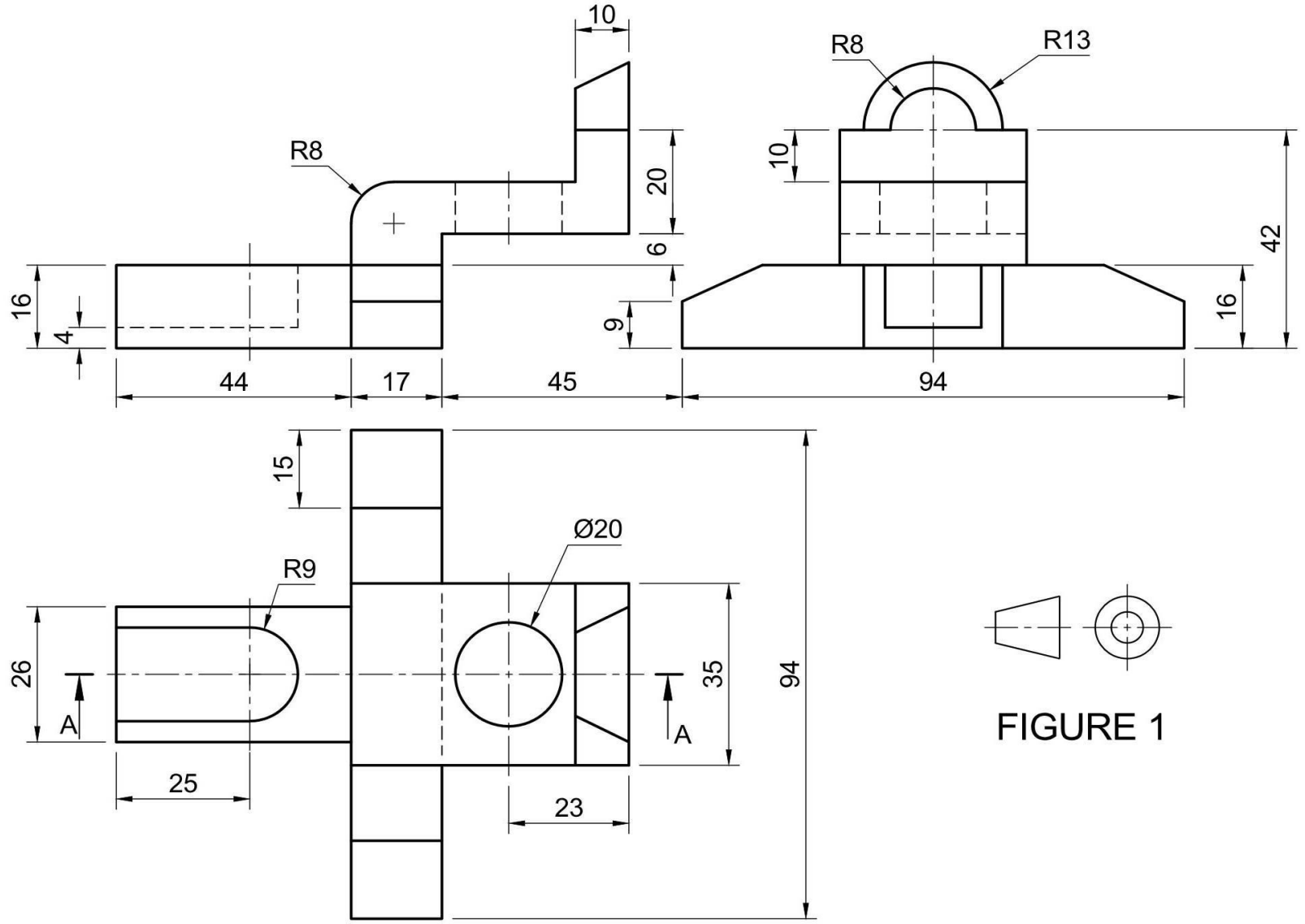

FIGURE 1

Copyright reserved

(8090214)

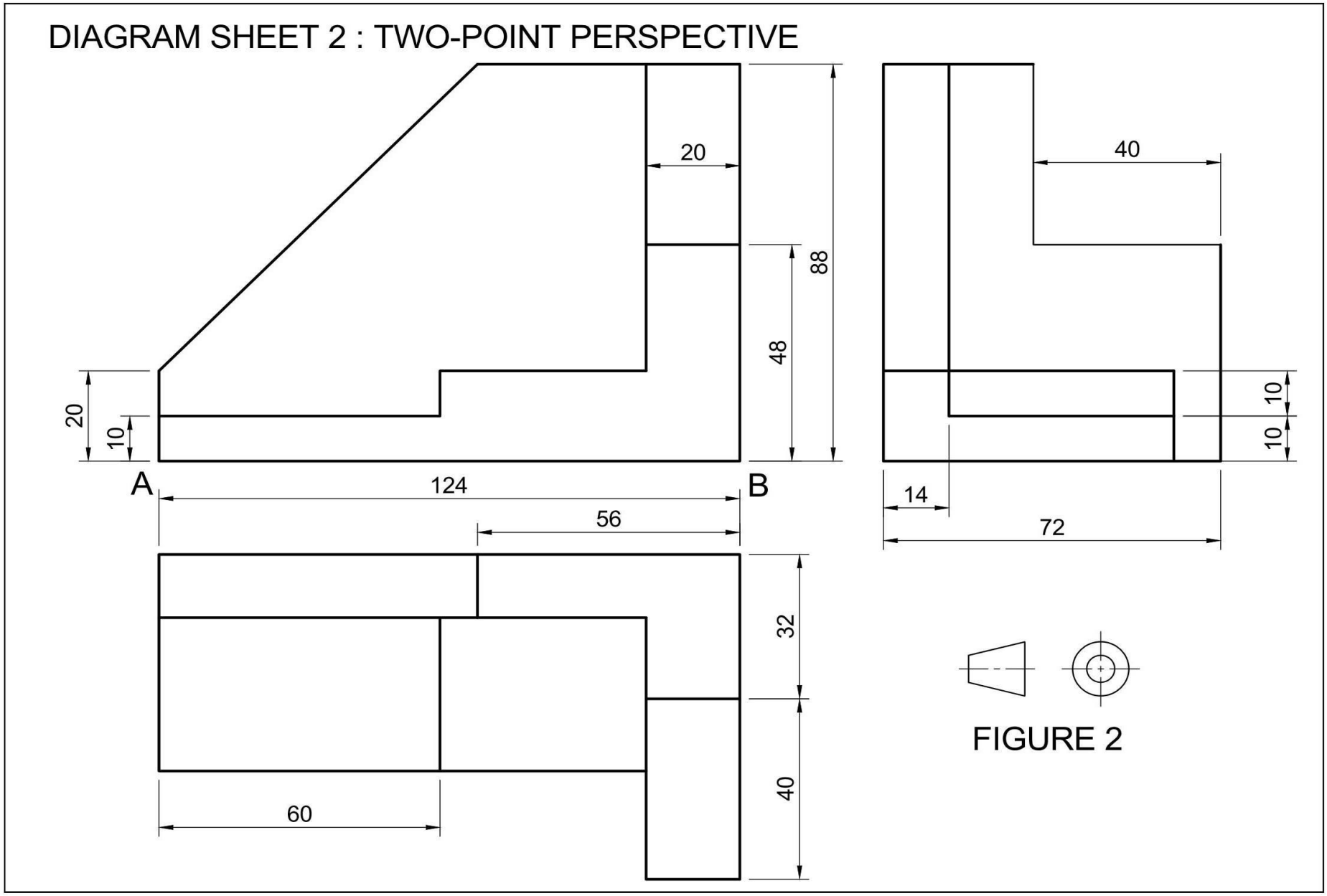

Copyright reserved

(8090214)

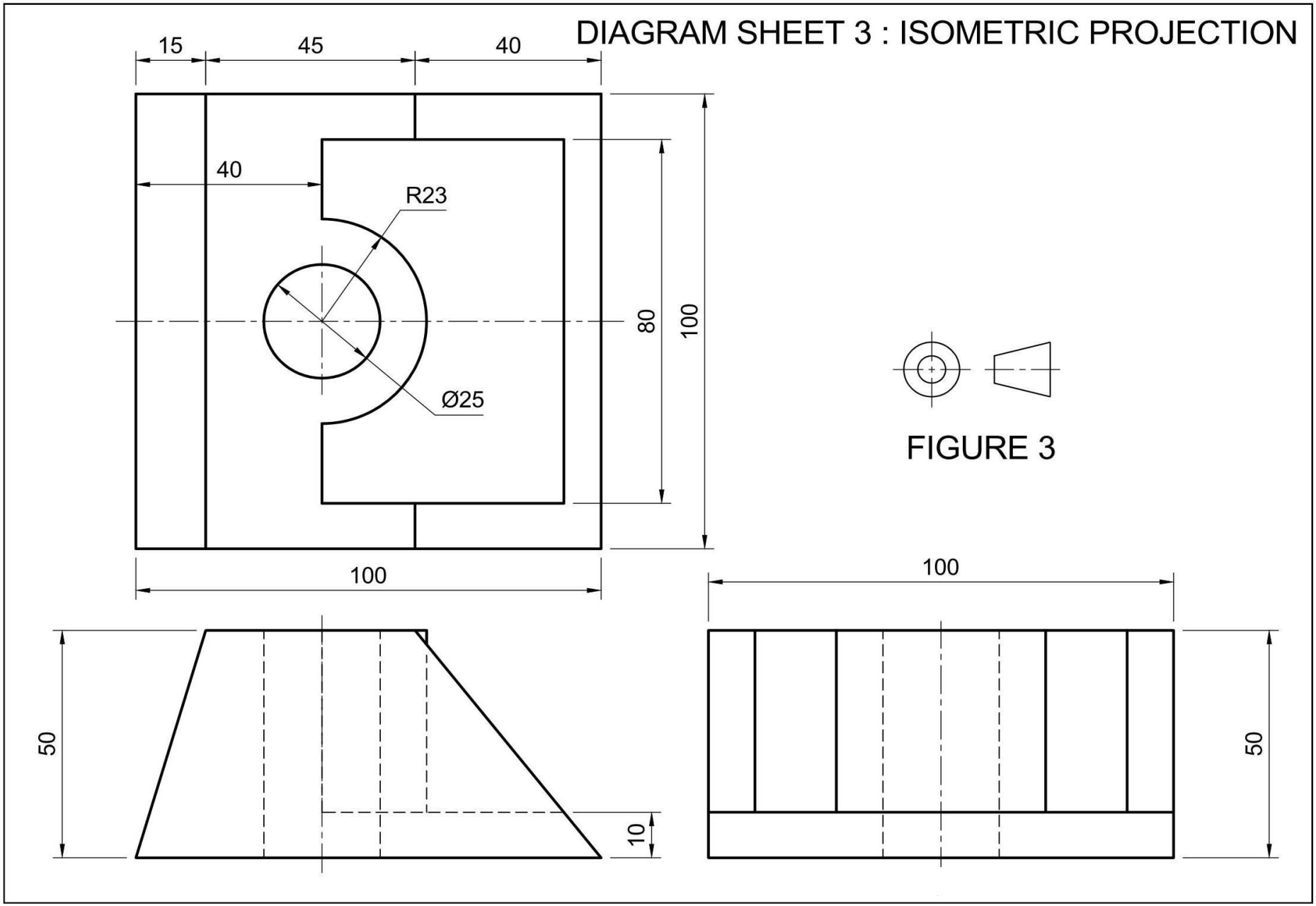

Copyright reserved

DIAGRAM SHEET 4 : GEAR-TEETH CONSTRUCTION

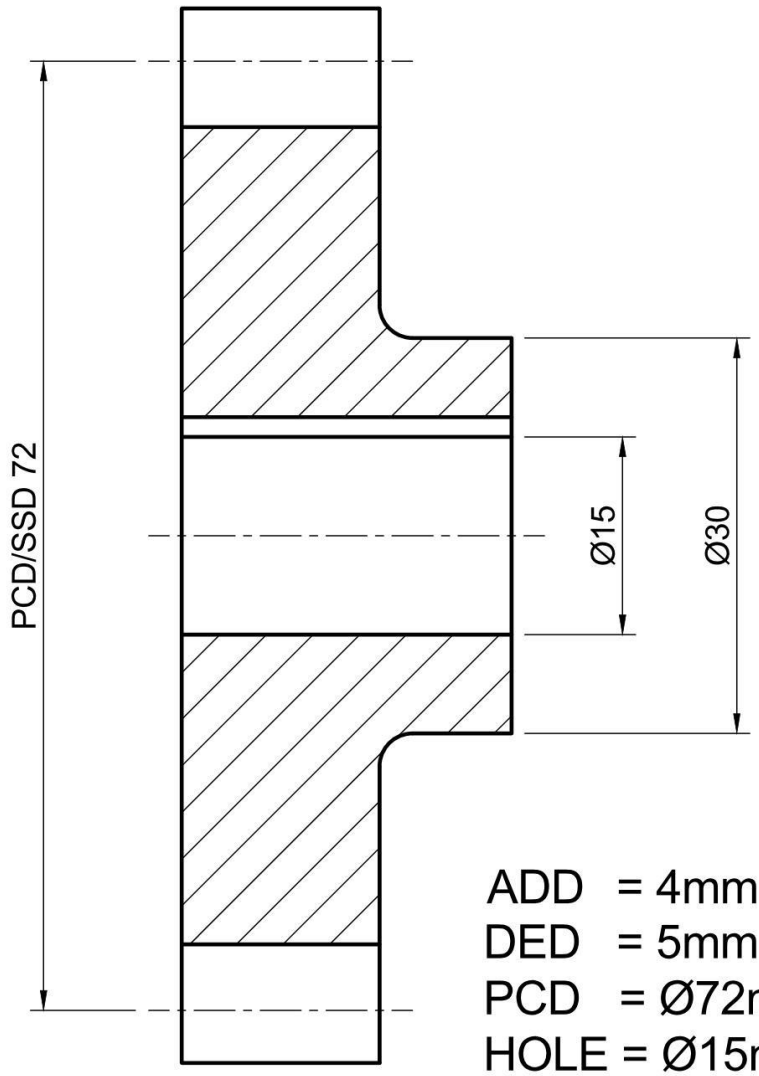

ADD = 4mm
DED = 5mm
PCD = Ø72mm
HOLE = Ø15mm
DRAW TO SCALE 2:1

FIGURE 4

Copyright reserved

(8090214)

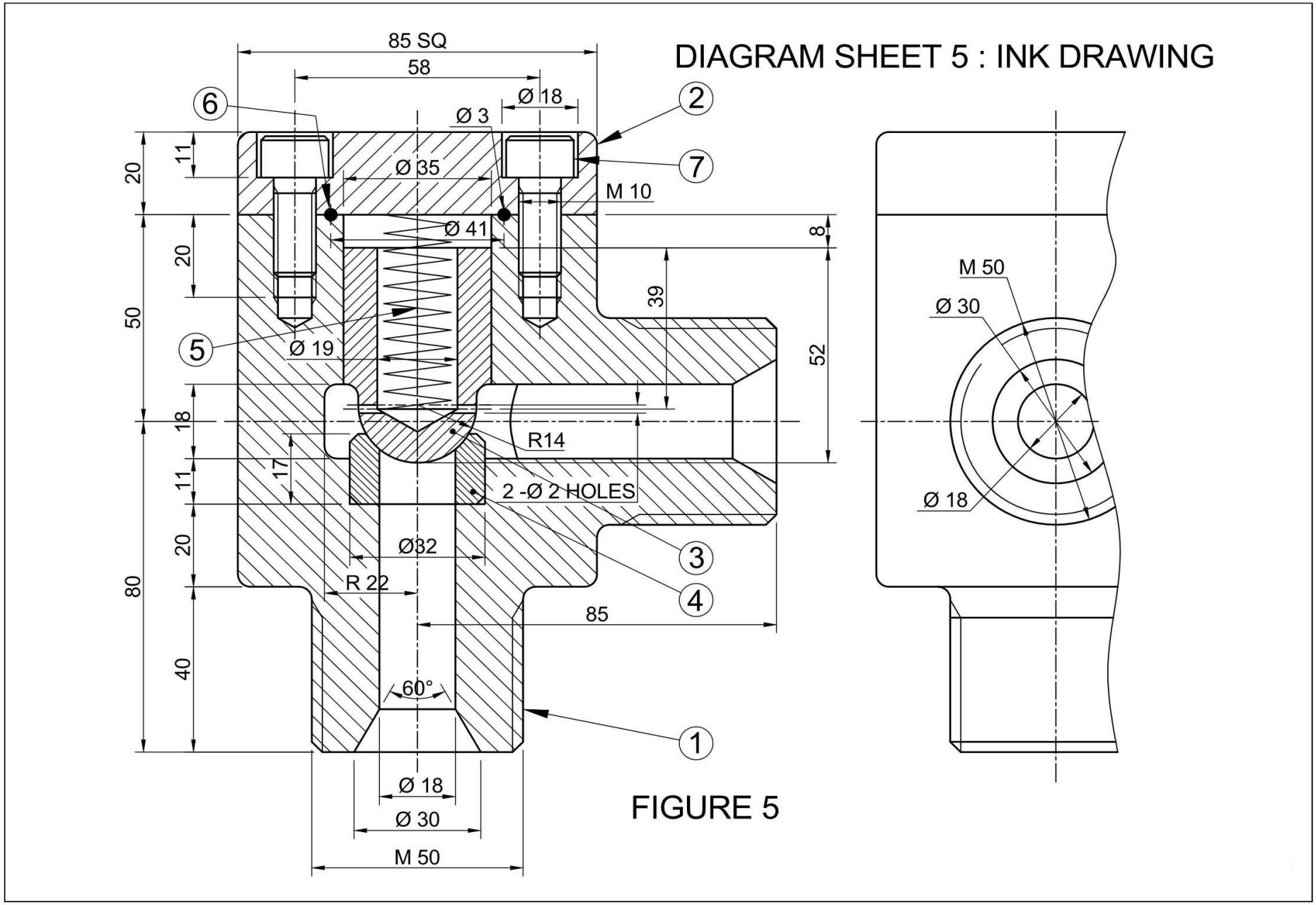

FIGURE 5

Copyright reserved

(8090214)

PICTORIAL DRAUGHTING

FORMULA SHEET

1. SCREW-THREAD CONSTRUCTION

Length = (pitch × number of turns) + pitch/2

Pitch divisions = pitch/12

2. GEAR-TEETH CONSTRUCTION

Module = addendum

Dedendum = 1,25 × module

PCD = module × number of teeth

Fillet radius = 0,3 × module

Circular pitch = 3,142 × module

3. SQUARE-SPRING CONSTRUCTION

Length = (lead × number of turns) + material thickness

Copyright reserved