higher education & training

Department:
Higher Education and Training
REPUBLIC OF SOUTH AFRICA

MARKING GUIDELINE

NATIONAL CERTIFICATE

PICTORIAL DRAUGHTING

2 August 2021

This marking guideline consists of 8 pages.

Copyright reserved

INSTRUCTIONS TO MARKERS

1. Mark all the questions.
2. Read all the answers carefully.
3. Follow the answers according to the numbering system used in the question paper.
5. Put your ticks and crosses neatly and legibly.
6. This marking guideline has been generated from CAD to PDF to JPEG. Please use the marking guideline that has been printed out as hardcopy for marking purposes, as it was printed from a CAD software program, hence it should be accurate to dimensions.
7. All drawings should be resized from the corners in order to ensure that circular drawings remain as circles.
8. Use only a red pen.

Copyright reserved

QUESTION 1: FREEHAND DRAWING

Commented [L1]: Please amend in all the figures – delete the percentage signs.

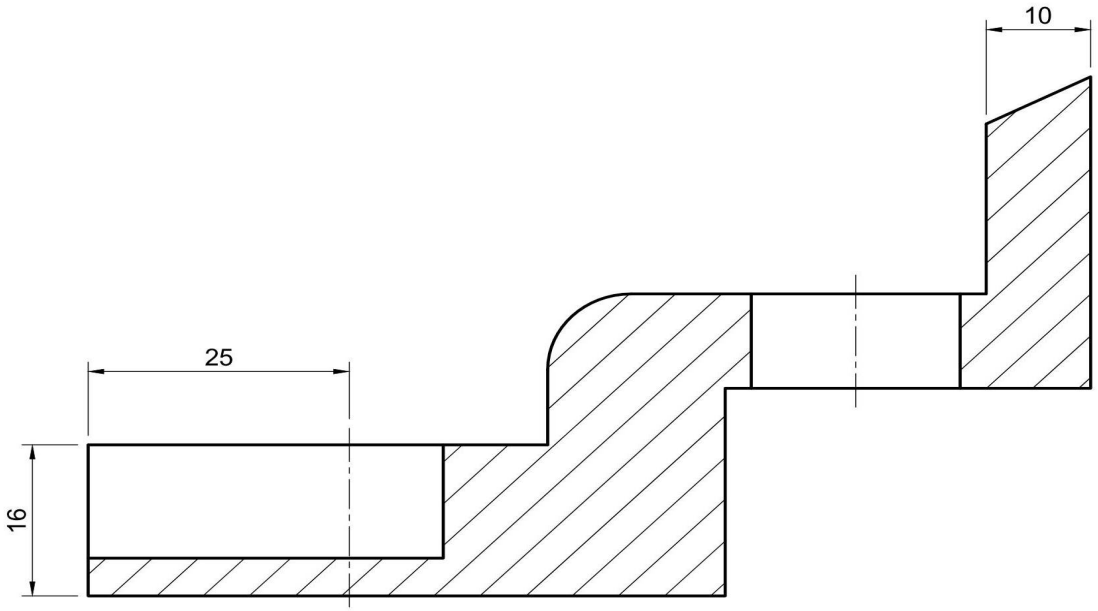

CASTING
SCALE 2:1

PROPORTION	= 7%
LINEWORK	= 4%
ACCURACY	= 2%
BALANCE LAYOUT/NEATNESS	= 1%
TOTAL	= 14%

Copyright reserved

QUESTION 2: TWO-POINT PERSPECTIVE DRAWING

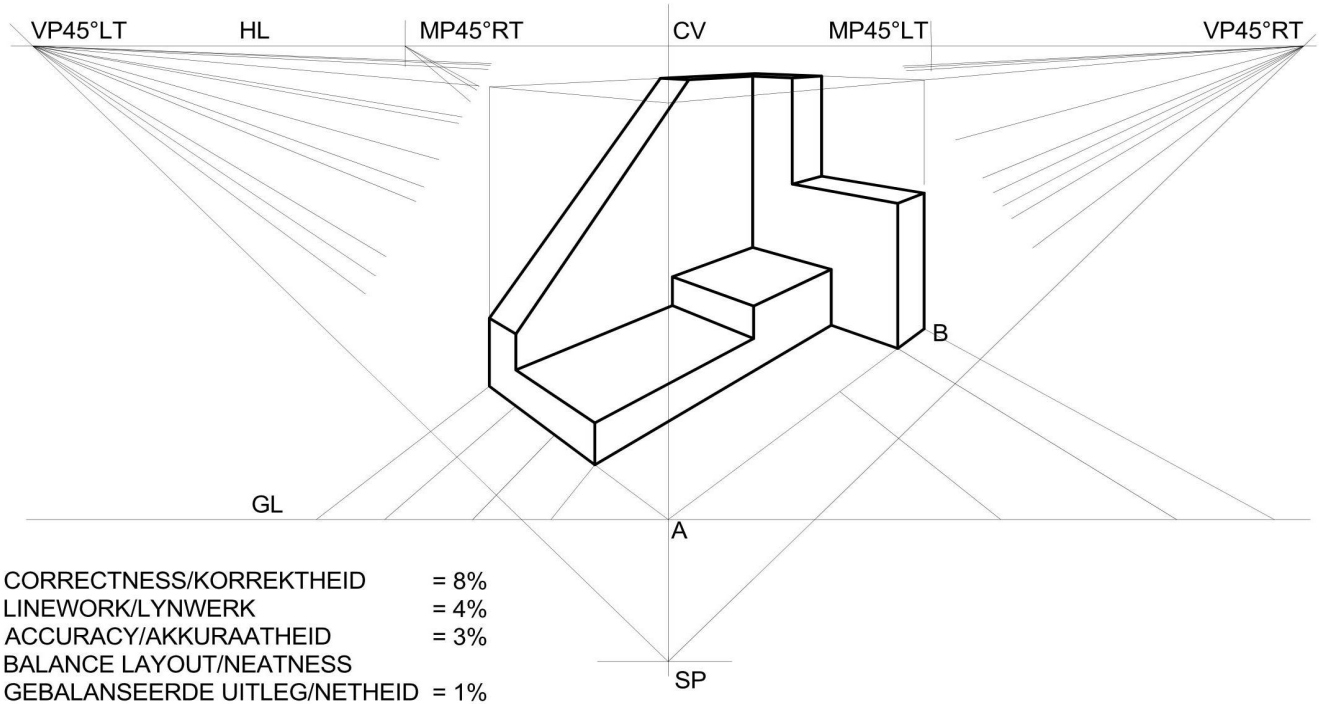

CORRECTNESS/KORREKTHEID	= 8%
LINEWORK/LYNWERK	= 4%
ACCURACY/AKKURAATHEID	= 3%
BALANCE LAYOUT/NEATNESS GEBALANSEERDE UITLEG/NETHEID	= 1%
TERMINOLOGY/TERMINOLOGIE	= 4%
TOTAL	= 20%

Copyright reserved

QUESTION 3: ISOMETRIC PROJECTION

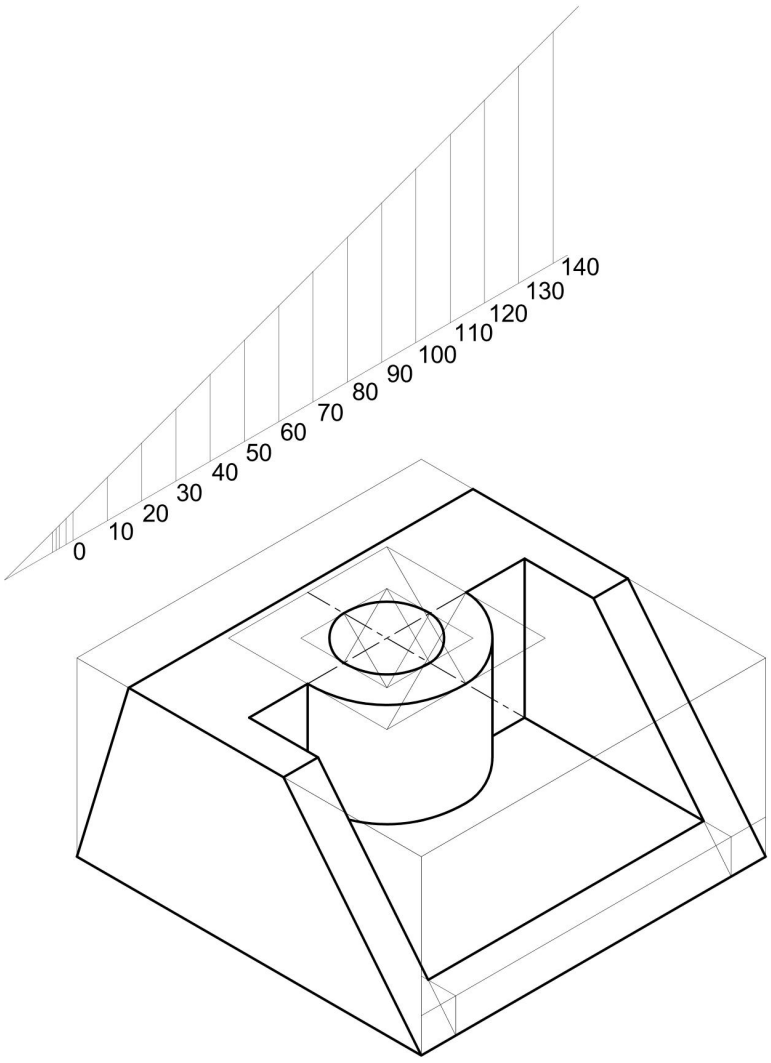

CORRECTNESS/KORREKTHEID	= 10%
LINEWORK/LYNWERK	= 5%
ACCURACY/AKKURAATHEID	= 3%
BALANCE LAYOUT/NEATNESS	= 2%
GEBALANSEERDE UITLEG/NETHEID	
TOTAL	= 20%

Copyright reserved

QUESTION 4: SQUARE-THREAD CONSTRUCTION

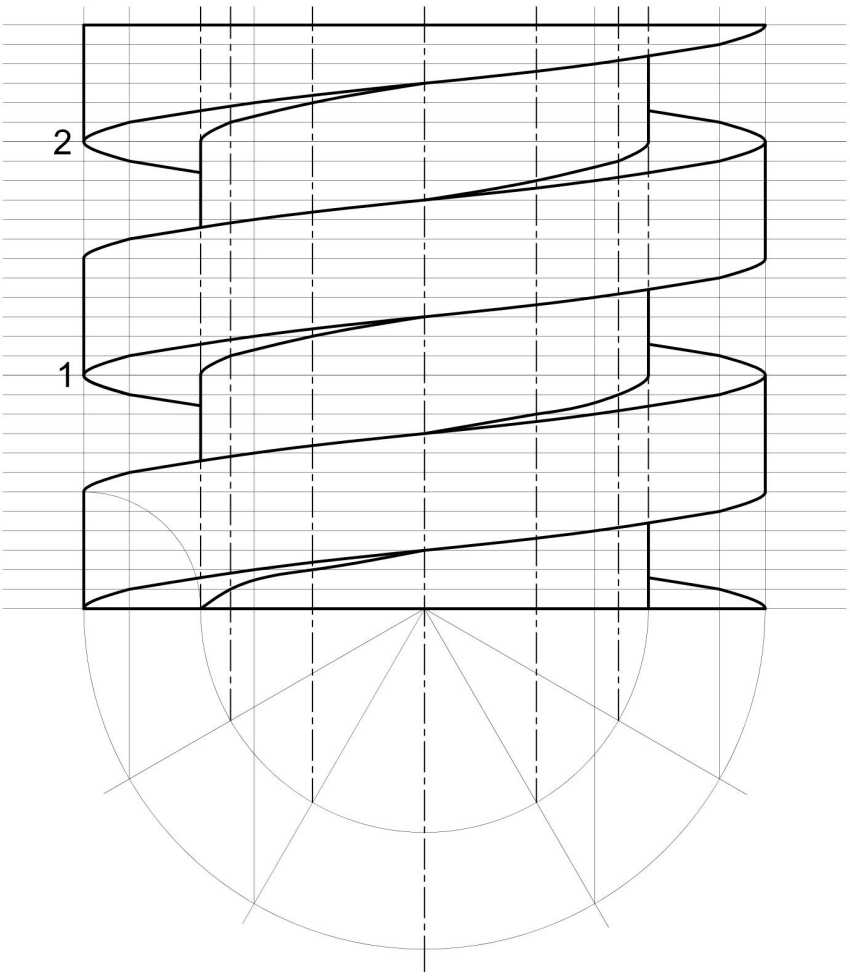

CORRECTNESS/KORREKTHEID	= 7%
LINEWORK/LYNWERK	= 4%
ACCURACY/AKKURAATHEID	= 2%
BALANCE LAYOUT/NEATNESS GEBALANSEERDE UITLEG/NETHEID	= 1%
TOTAL	= 14%

Copyright reserved

QUESTION 5: GEAR-TEETH CONSTRUCTION

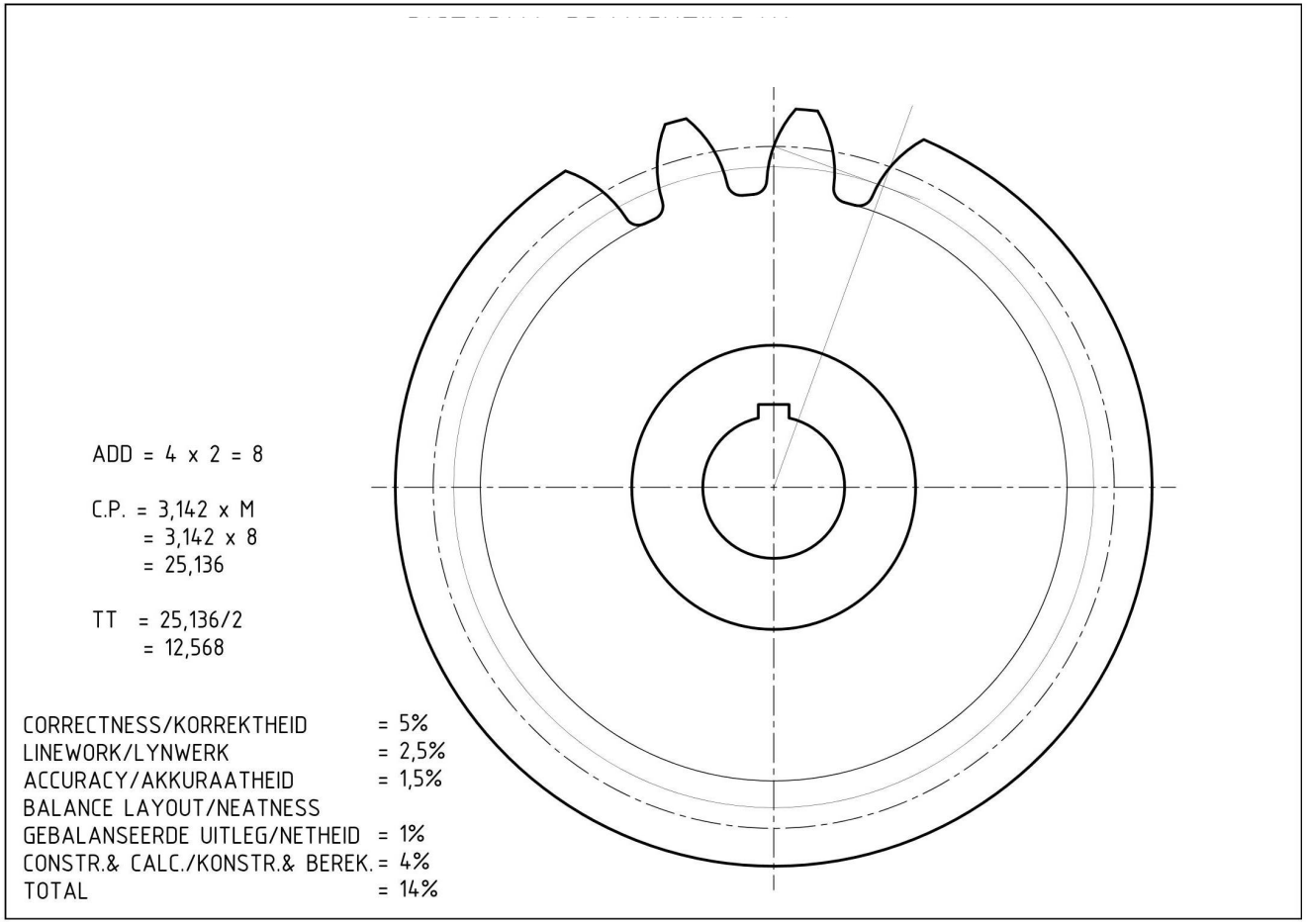

Copyright reserved

QUESTION 6: INK DRAWING

Commented [L2]: Indicate the total at the end of the memo.

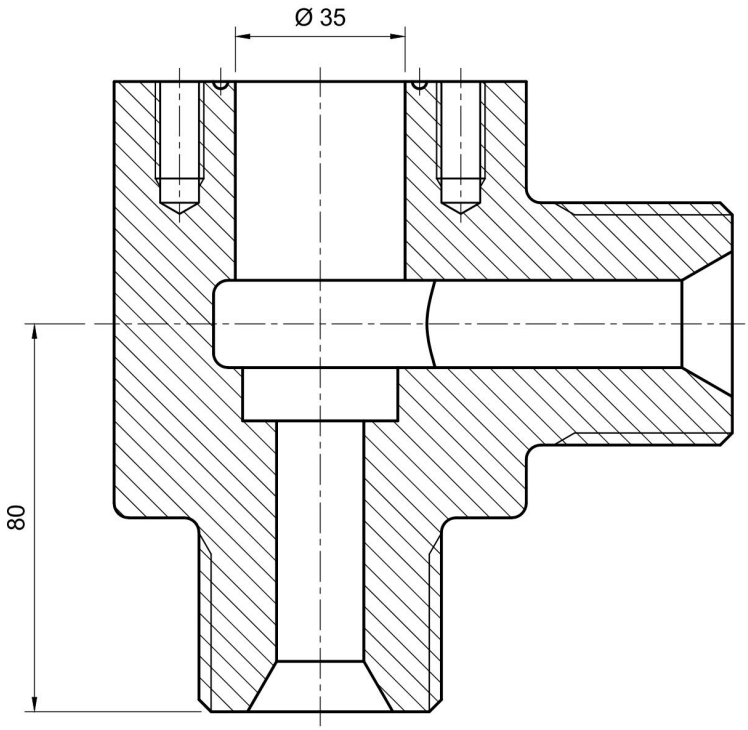

RELEASE VALVE BODY
SCALE 1:1

CORRECTNESS/KORREKTHEID	= 9%
LINEWORK/LYNWERK	= 4%
ACCURACY/AKKURAATHEID	= 3%
BALANCE LAYOUT/NEATNESS GEBALANSEERDE UITLEG/NETHEID	= 2%
TOTAL	= 18%

Copyright reserved