higher education & training

Department:
Higher Education and Training
REPUBLIC OF SOUTH AFRICA

MARKING GUIDELINE

NATIONAL CERTIFICATE

PAPERMAKING N4

2 AUGUST 2018

This marking guideline consists of 6 pages.

Copyright reserved

QUESTION 1

1.1

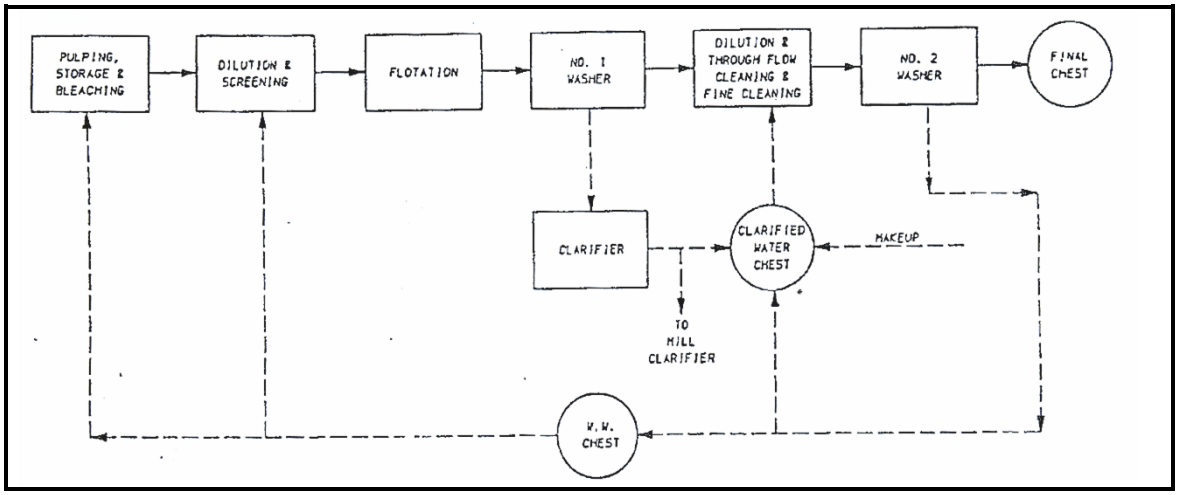

- Pulper
- Dilution
- Screening
- Flotation
- Cleaning
- Washing
- Bleaching
- Storage (Any 6 × 1) (6)

1.2
- Chemicals
- Air bubbles
- Froth-skimming (3)

1.3
- Diameter
- Cone angle
- Length
- Inlet (4)

1.4 Improves stretch and strength (2)

1.5

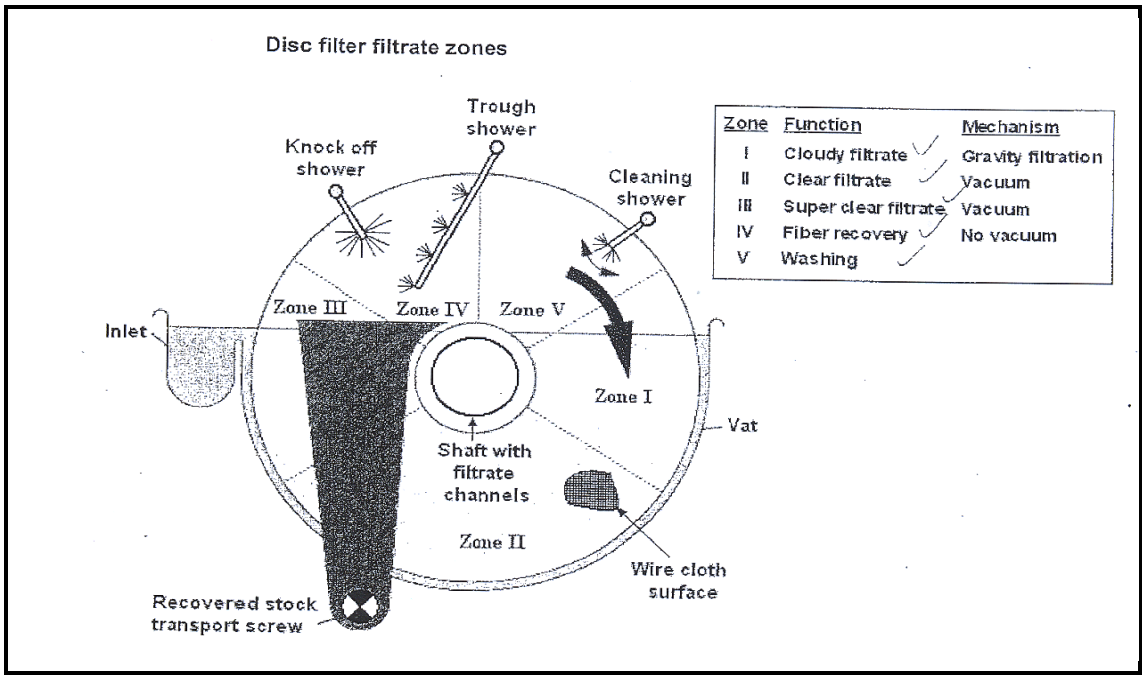

- Segments
- Zones
- Knock-off showers
- Vat
- Clear ww
- Cloudy ww
- Droplet

(Any 6 × 1) (6)
[21]

QUESTION 2

2.1 2.1.1 Sheet formation (1)

2.1.2 Thickstock enters silo, diluted to 1%, raises vertical slice, headbox level drops, fan pump speeds up to maintain level (4)

2.2 2.2.1

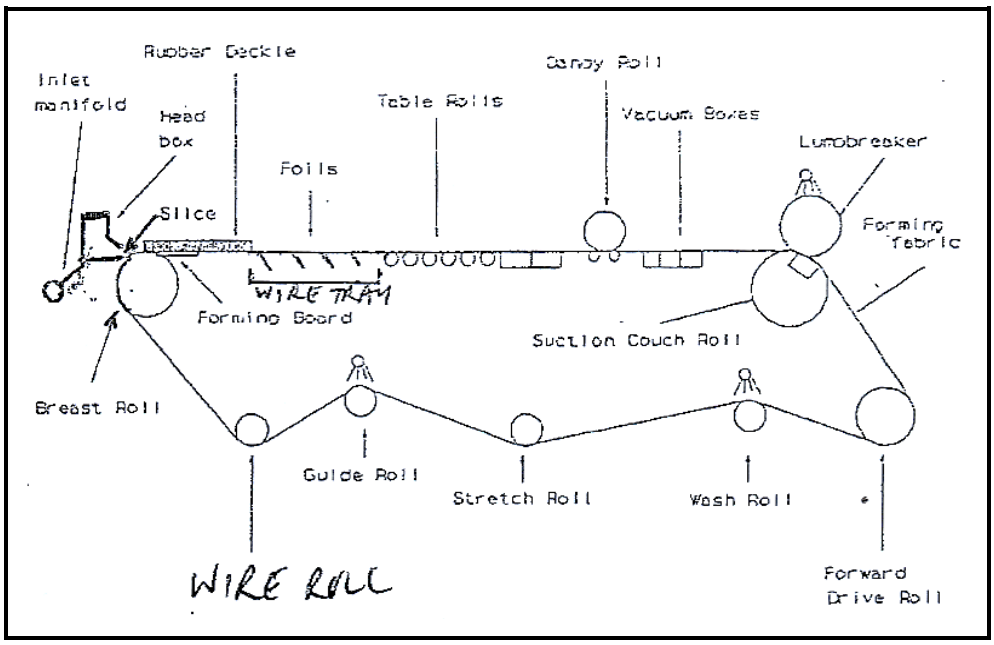

- Breast roll
- Wire
- Foils
- Table rolls
- Vacuum boxes
- Dandy
- Couch
- Forward drive
- Wire rolls
- Stretch roll
- Guide roll (Any 5 × 1) (5)

2.2.2 Function of each component (5)

2.3 2.3.1 Initial delay in drainage, thereafter gradually decreasing vacuum (5)

2.3.2

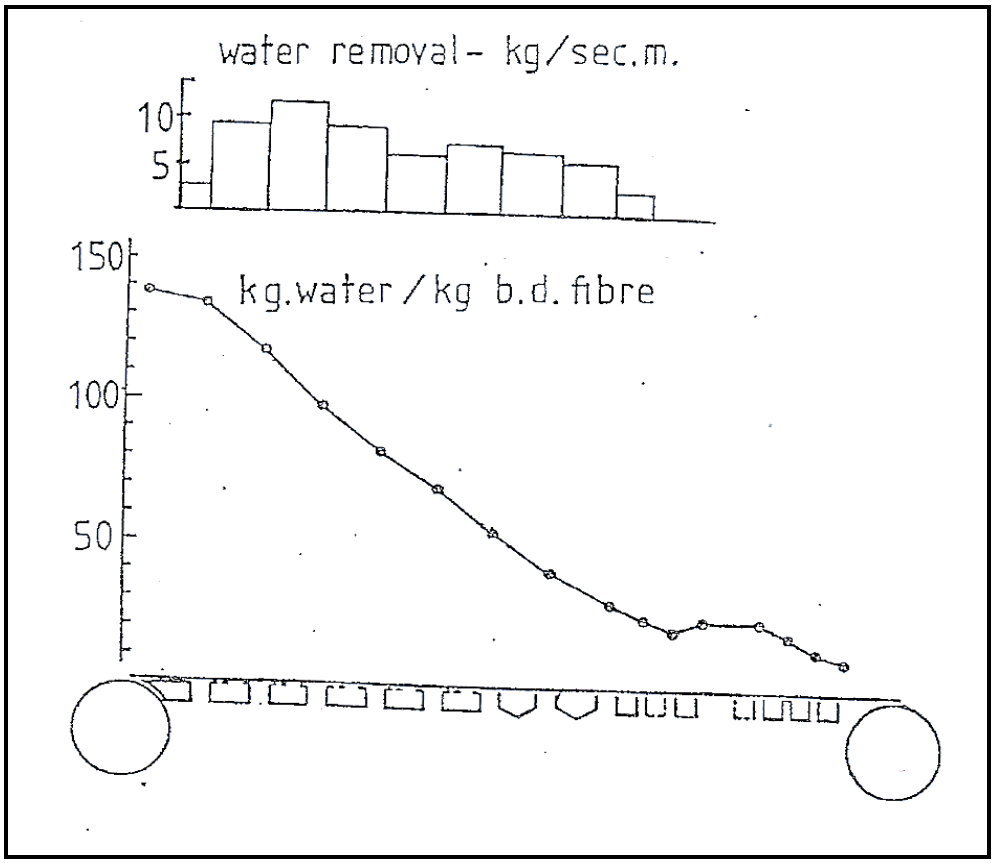

Descending profile with gradual drainage (3)
[23]

QUESTION 3

3.1 Improves quality and productivity, retains fillers and fines (2)

3.2 Pd between stern and guy chapman layer
To control chemical dosage (3)

3.3 Polymer make-up and feedpoint important, proper dilution and mixing, contact time, shear rate (4)

3.4
- Keep system clean
- Wash-ups
- Boilout (Any 2 × 1) (2)

[11]

QUESTION 4

4.1
- Pc action: Nip load determines water removal – low basis mass
- Fc action: Flow of water out of sheet limiting factor – high basis mass

(2 × 2) (4)

4.2 4.2.1 Increases
4.2.2 Increases
4.2.3 Decreases

(3 × 1) (3)

4.3

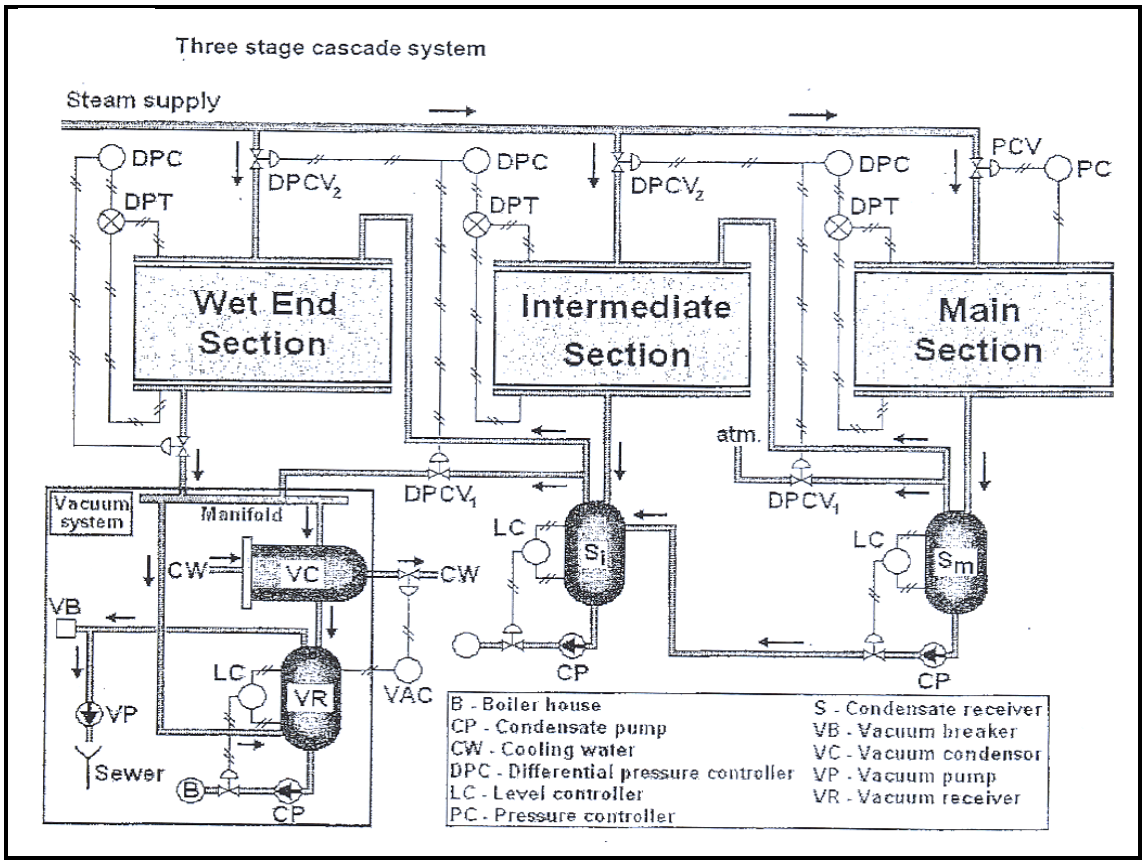

Main steam supply, main, intermediate, wet end, separators, header, dpc, vacuum system (9)

[16]

QUESTION 5

5.1
- Depth of pond should be even across full width of the size press
- Maintain an adequate pond depth and prevent fluctuations
- Determine optimum load
- Control starch cooking process (degree of conversion, dilution/-concentration, temperature) (4)

5.2 5.2.1 Marks across sheet in regular frequency (1)
5.2.2 Reduce moisture, staggered stack, reduce speed (2)

5.3 5.3.1 Profile gradually decreasing, increases towards end (3)
5.3.2 Rider roll loading, drum torque differential, tension (5)
[15]

QUESTION 6

6.1 Burst
6.2 Edgewise compression
6.3 Fibre bonds
6.4 Resistance to abrasion
6.5 Water resistance

(5 × 1) **[5]**

QUESTION 7

7.1
- Permeability
- Compressibility
- Load elongation
- Heat resistance (4)

7.2 7.2.1 High pressure showers, vacuum, lubricating showers (3)
7.2.2 Chemical/Caustic, cleaning showers (2)
[9]

TOTAL: 100

Copyright reserved