higher education & training

Department:
Higher Education and Training
REPUBLIC OF SOUTH AFRICA

# NATIONAL CERTIFICATE

# MOTOR TRADE THEORY N3

(11040673)

**2 August 2021 (X-paper)**
**09:00–12:00**

**Drawing instruments and nonprogrammable calculators may be used.**

**This question paper consists of 7 pages.**

152Q1G2102

Copyright reserved

# DEPARTMENT OF HIGHER EDUCATION AND TRAINING
# REPUBLIC OF SOUTH AFRICA

NATIONAL CERTIFICATE
MOTOR TRADE THEORY N3
TIME: 3 HOURS
MARKS: 100

---

**INSTRUCTIONS AND INFORMATION**

1. Answer all the questions.
2. Read all the questions carefully.
3. Number the answers according to the numbering system used in this question paper.
4. Start each question on a new page.
5. Only use a black or blue pen.
6. Write neatly and legibly.

---

Copyright reserved 

## QUESTION 1

1.1 Various options are given as possible answers to the following questions. Choose the answer and write only the letter (A–D) next to the question number (1.1.1–1.1.5) in the ANSWER BOOK.

1.1.1 The term used to describe how well an engine can convert petrol fuel to power is called …

A engine displacement.
B engine power.
C engine efficiency.
D engine conversion.

1.1.2 The component that controls the shifting of gears in an electronically controlled automatic gearbox is called …

A an electronic control unit (ECU).
B a transmission control unit (TCU).
C on-board diagnostics (OBD).
D a direct shift gearbox(DSG).

1.1.3 An over-head camshaft (OHC) engine does not use …

A pushrods.
B shims.
C hydraulic lifters.
D tappets.

1.1.4 The primary driver in a hybrid vehicle is the …

A electric motor.
B turbo charger.
C on-board computer.
D petrol engine.

1.1.5 The period when both the exhaust valve and the inlet valve are open is called …

A valve lag.
B valve overlap.
C valve timing.
D timing advance.

(5 × 1) (5)

1.2. Complete the following sentences by choosing a word or words from the list below. Write only the answer next to the question number (1.2.1–1.2.5) in the ANSWER BOOK.

| electrical motor; velocity; ECU; hydraulics; force; sensors; API |
|---|

The electrical power steering (EPS) system is the most common system on modern vehicles. It completely eliminates the need for (1.2.1) … to steer. It uses an (1.2.2) … to provide steering assist. The electric motor is controlled by the (1.2.3) …control module, which receives information from (1.2.4)… that detect the vehicle speed and the (1.2.5) … that the driver exerts on the steering wheel.

(5 × 1) (5)

1.3 Indicate whether the following statements are TRUE or FALSE by writing only 'True' or 'False' next to question number (1.3.1–1.3.5) in the ANSWER BOOK.

1.3.1 A turbocharger is a device that decreases engine efficiency and power.

1.3.2 Supercharger shafts can rotate at speeds up to 60 000 r/min.

1.3.3 Switching off the engine while the turbocharger is still rotating at high revolutions can lead to premature turbocharger failure.

1.3.4 A wastegate valve is situated in the turbocharger inlet side of the air filter.

1.3.5 The main parts of the turbocharger include the turbine, drive belt and impellor.

(5 × 1) (5)

1.4 Complete the following sentences by writing only the missing word or words next to the question number (1.4.1–1.4.5) in the ANSWER BOOK.

1.4.1 In a modern fuel injection system, the oxygen sensor is situated in the ….

1.4.2 A mass airflow sensor (MAF) is mounted between the … and the throttle position sensor.

1.4.3 The sensors on an electronic fuel injection system send data to and from the ….

1.4.4 The main objective of any petrol delivery system is to provide the correct mixture of … and …

1.4.5 The main information required for a single-point injection system to calculate the required fuel quantity is engine speed and …

(5 × 1) (5)

**[20]**

Copyright reserved 

## QUESTION 2

2.1. An engine has a cylinder diameter of 120 mm and a stroke length of 140 mm. It is equipped with flat-top pistons and a hemispherical combustion chamber with the same diameter as the cylinder, situated in the cylinder head.

If the formula for the volume of a sphere is given as ($V = \frac{4}{3}\pi R^3$),

use the following formulae

C.R. = $\frac{Vs+Vc}{Vc}$ Vs = $\frac{\pi d^2}{4}$ x SL N = 1 – $(\frac{1}{r})^{0,4}$ h = $\frac{SL}{CR-1}$

to calculate the following:

2.1.1 The clearance volume (4)

2.1.2 The compression ratio (6)

2.2 Would the Compression Ratio calculated in QUESTION 2.1.2 above, be suitable for this engine? Substantiate your answer. (2)

2.3 State THREE functions of the oil pump in an automatic gearbox. (3)

2.4 Draw a labelled sketch of a free-wheel device for an automatic gearbox that rotates in an anti-clockwise direction. (5)

**[20]**

## QUESTION 3

3.1. FIGURE 1 (below), shows a sectional sketch of the parts of an automatic gearbox.

Name the labelled parts by writing only the answer next to the letter (A–K) in the ANSWER BOOK.

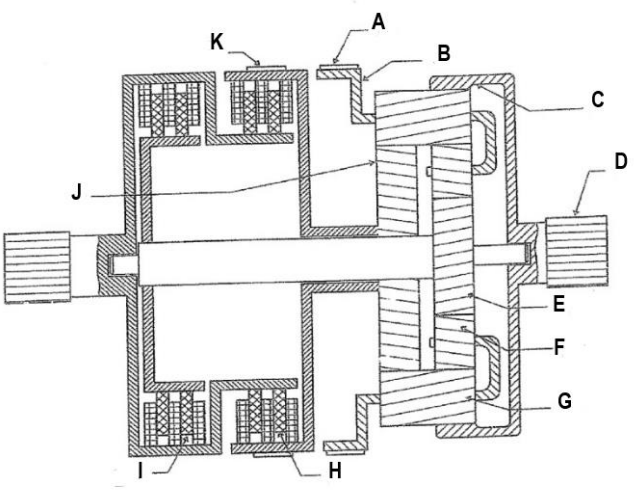


**FIGURE 1** (11)

3.2. Explain why some vehicles are equipped with each of the following drive arrangements.

State TWO reasons in each case:

3.2.1 Differential lock mechanism

3.2.2. Tandem drive

3.2.3. Limited slip differential

(3 × 2) (6)

3.3. Briefly explain how the differential performance is limited when using a conventional differential in a vehicle. (3)

**[20]**

**QUESTION 4**

4.1 Name EIGHT diagnostic service tools or equipment that can be found in a modern diagnostic centre. (8)

4.2. FIGURE 2 (below), shows a sketch of a valve timing diagram for a four-stroke engine.

Assuming a clockwise direction of rotation, name the labelled items by writing only the answer next to the letter (A–H) in the ANSWER BOOK.

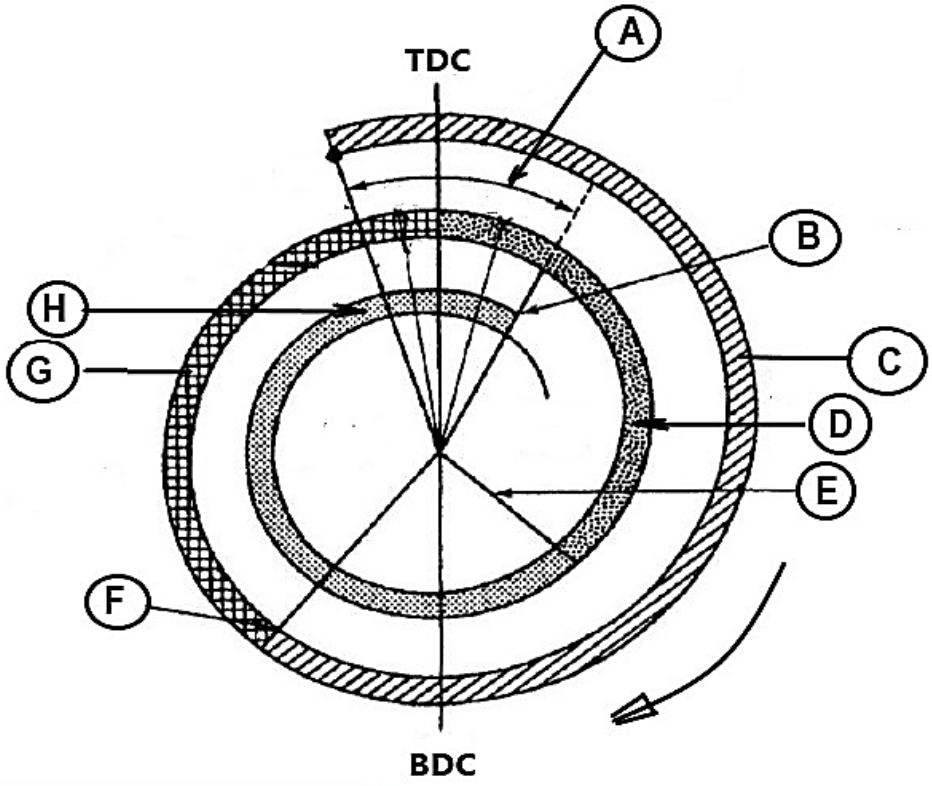


**FIGURE 2** (8)

4.3. State FOUR advantages of an *electronic ignition system* when compared to a *conventional ignition system*. (4)

**[20]**

**QUESTION 5**

5.1. Explain TWO types of oil flow that occur in a torque converter during operation. (2)

5.2. Name the THREE main components of a torque converter. (3)

5.3 5.3.1 State THREE advantages of an I-head engine. (3)

5.3.2 State TWO advantages a T-head engine. (2)

5.4. Make a neat, labelled, diagrammatic sketch of a transistor found in an electronic ignition system. (4)

5.5. State the names of THREE components in each of the following cases:

5.5.1 Used in electronic ignition systems in modern vehicles but are not used in conventional ignition systems. (3)

5.5.2 Used in conventional ignition systems and not found in modern electronic ignition systems. (3)

**[20]**

**TOTAL: 100**

Copyright reserved