higher education & training

Department:
Higher Education and Training
REPUBLIC OF SOUTH AFRICA

NATIONAL CERTIFICATE

MOTOR TRADE THEORY N3

(11040673

7 April 2020 (X-paper)
09:00–12:00

This question paper consists of 6 pages.

148Q1A2007

Copyright reserved

DEPARTMENT OF HIGHER EDUCATION AND TRAINING
REPUBLIC OF SOUTH AFRICA

NATIONAL CERTIFICATE
MOTOR TRADE THEORY N3
TIME: 3 HOURS
MARKS: 100

INSTRUCTIONS AND INFORMATION

1. Answer all the questions.
2. Read all the questions carefully.
3. Number the answers according to the numbering system used in this question paper.
4. Start each section on a new page.
5. Write neatly and legibly.

FORMULA:

$C_r = \frac{V_s + V_c}{V_c}$ $V_s = \frac{\pi \times d^2}{4}$ x SL $N = 1 - (\frac{1}{r})^{0{,}4}$

Copyright reserved

QUESTION 1

1.1 Calculate the cylinder diameter of an engine with a compression ratio of 15:1, a stroke length of 150 mm and a clearance volume of 230 cm³. (8)

1.2 Calculate the compression ratio of an engine with an air standard efficiency of 65%. (6)

1.3 State SIX mechanical defects which may cause a decrease in volumetric efficiency. (6)

1.4 1.4.1 List THREE advantages of L- Head Valve arrangements. (3)

1.4.2 Name TWO disadvantages of L-Head Valve arrangements (2)

[25]

QUESTION 2

Indicate whether the following statements are TRUE or FALSE by writing only 'True' or 'False' next to the question number (2.1–2.10) in the ANSWER BOOK.

2.1 To be appointed as a receptionist at a garage the person has to be a qualified motor mechanic.

2.2 Reporting incidents help to reduce accidents at the workplace.

2.3 With regard to the Health and Safety Regulations employees must purchase their own protective clothing as required by the employer.

2.4 Everyone working in the workshop should have access to the tool store.

2.5 All tools and equipment should be recorded in an inventory.

2.6 There must be no existing competition when selecting and planning for a new service station.

2.7 One of the safety precautions for a grinding machine is that the user shall provide every machine with a transparent unbreakable shield.

2.8 Effective ventilation is necessary when welding or soldering is done.

2.9 Change rooms in good condition must be provided free of charge by the employer.

2.10 The receptionist is not responsible for test driving the vehicle that has been serviced.

(10 × 1) **[10]**

Copyright reserved

QUESTION 3

Choose a term from COLUMN B that matches a description in COLUMN A. Write only the letter (A–L) next to the question number (3.1–3.10) in the ANSWER BOOK.

COLUMN A		COLUMN B	
3.1	The pump and turbine are components of…	A	masked valve
3.2	Amount of air that can be passed through the engine per minute	B	thermal efficiency
3.3	Does not use a steering box	C	compression ratio
3.4	Efficiency with which released energy can be converted into mechanical work at driving end of crankshaft	D	torque converter
3.5	Noisy in operation	E	sodium valve
3.6	Directs incoming air around combustion chamber with swirling motion	F	power-assisted steering
3.7	Efficiency with which air can be mixed with fuel and burnt to release heat	G	fluid coupling
3.8	Between 4,5:1 and 10:1 in an engine	H	mechanical efficiency
3.9	Weak construction due to hollow stem	I	gear drives
3.10	The pump, stator and turbine are part of ….	J	power steering
		K	volumetric efficiency
		L	rotary valve

(10 × 1) **[10]**

QUESTION 4

4.1 Briefly explain the operation of a hydraulic valve lifter. (8)

4.2 Name the clutch and brake band engagements made under each of the following conditions:

4.2.1 Second gear

4.2.2 Third gear

4.2.3 Reverse gear

(3 × 2) (6)

4.3 Draw a labelled sectional view of the hydraulic cylinder of a linkage-type power-steering system. (10)

[24]

Copyright reserved

QUESTION 5

5.1 FIGURE 1 shows a sectional sketch of a torque converter.

Identify the marked components by writing the answer next to the question number (5.1.1–5.1.6) in the ANSWER BOOK. (6)

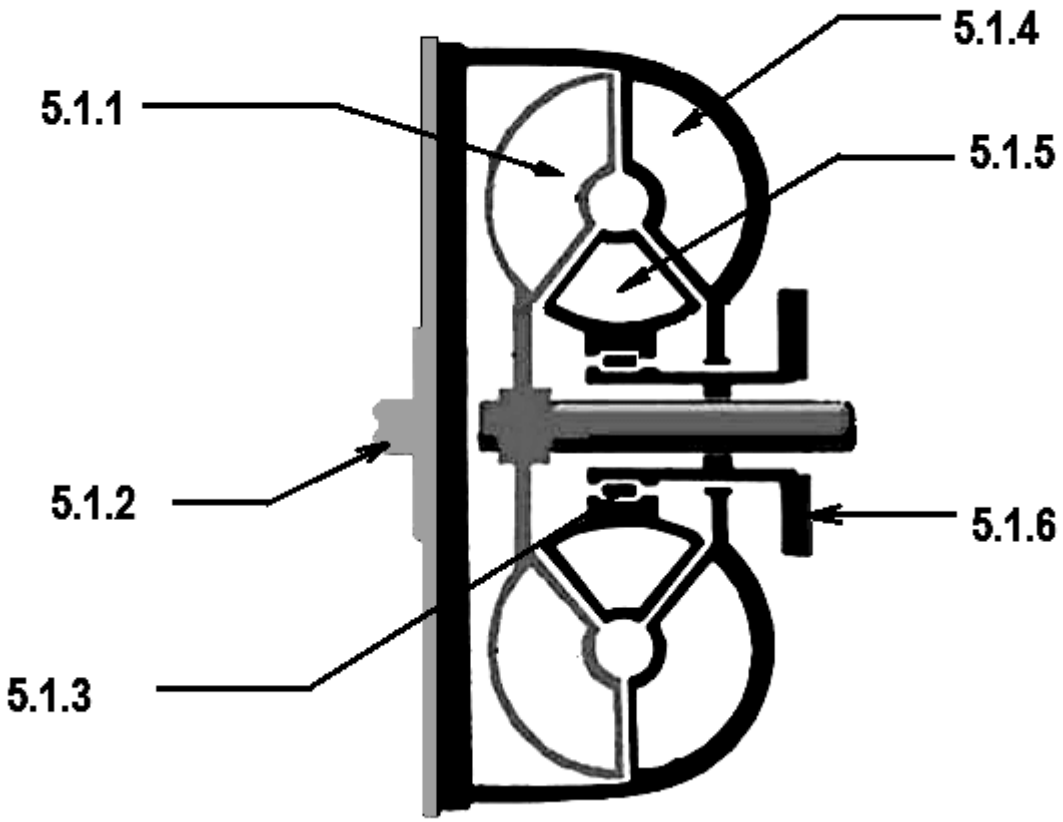

Figure 1

5,2 Describe the operation of a torque converter in an accelerating vehicle. (6)

5.3 Name THREE types of pressure in an automatic gearbox. (3)

[15]

QUESTION 6

6.1 FIGURE 2 shows a sectioned view of a limited-slip differential.

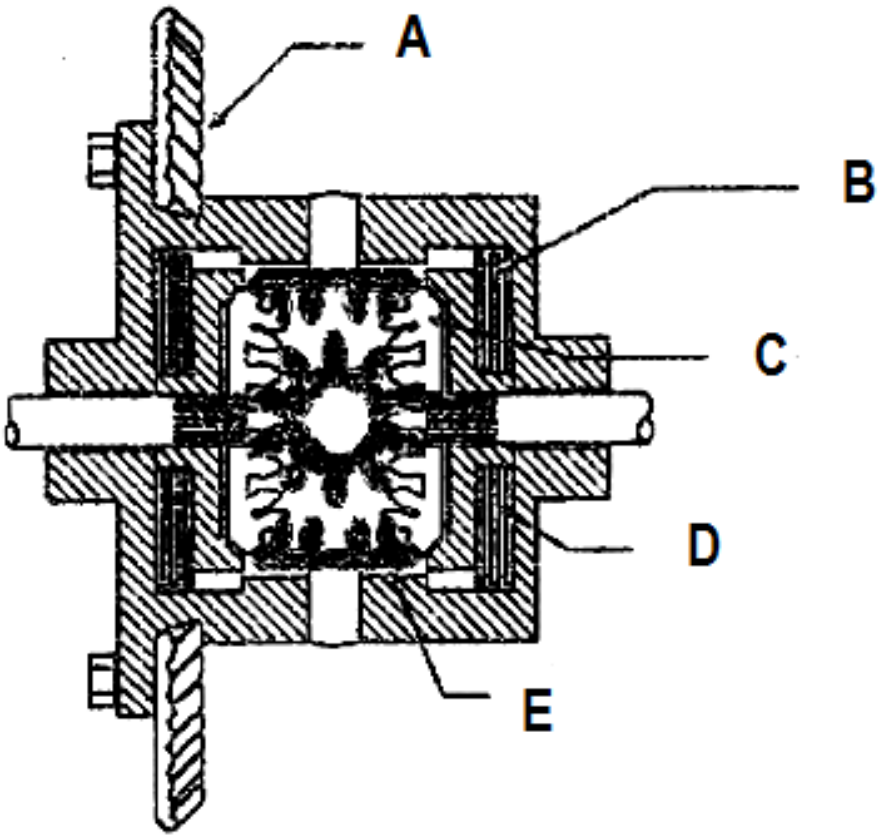

FIGURE 2

6.1.1 Identify the marked components by writing the answer next to the letter (A–E) in the ANSWER BOOK. (5)

6.1.2 Explain the operation of the limited-slip differential when the left driving wheel moves on a slippery surface. (5)

6.2 State each of the following regarding an epicyclic gear set in contrast with a conventional gear set:

6.2.1 THREE advantages

6.2.2 THREE disadvantages

(2 × 3) (6)
[16]

TOTAL: 100

Copyright reserved