higher education & training

Department:
Higher Education and Training
REPUBLIC OF SOUTH AFRICA

T1240**(E)**(A5)T

NATIONAL CERTIFICATE

MOTOR TRADE THEORY N3

(11040673)

5 April 2018 (X-Paper)
09:00–12:00

Non-programmable calculators may be used.

This question paper consists of 5 pages.

Copyright reserved

DEPARTMENT OF HIGHER EDUCATION AND TRAINING
REPUBLIC OF SOUTH AFRICA

NATIONAL CERTIFICATE
MOTOR TRADE THEORY N3
TIME: 3 HOURS
MARKS: 100

INSTRUCTIONS AND INFORMATION

1. Answer ALL the questions.
2. Read ALL the questions carefully.
3. Number the answers according to the numbering system used in this question paper.
4. Write neatly and legibly.

FORMULAE:

C.R. = $\frac{Vs+Vc}{Vc}$ Vc = $\frac{\pi d2}{4}$ × h Vs = $\frac{\pi d^2}{4}$ × SL N = $1 - \left(\frac{1}{r}\right)^{0{,}4}$

Copyright reserved

QUESTION 1

1.1 Explain what the difference is between Swept Volume and Clearance Volume in internal combustion engines. (4)

1.2 An engine has a cylinder diameter of 85 mm and a stroke length of 95 mm. The combustion chamber is in the cylinder head and has the same diameter as the cylinder. The air standard efficiency is 67%.

Determine the clearance volume of the engine and leave the answer in centimetres. (7)

1.3 Is the compression ratio calculated in QUESTION 1.2 suitable for a spark ignition engine? Motivate the answer. (2)

1.4 What is the difference between cold valve clearance adjustments and hot valve clearance adjustments? (4)

1.5 What is the function of a masked valve? (1)

1.6 The diagram below shows an overhead valve arrangement. Label the parts by writing the answer next to the letter (A–G) in the ANSWER BOOK. (7)

[25]

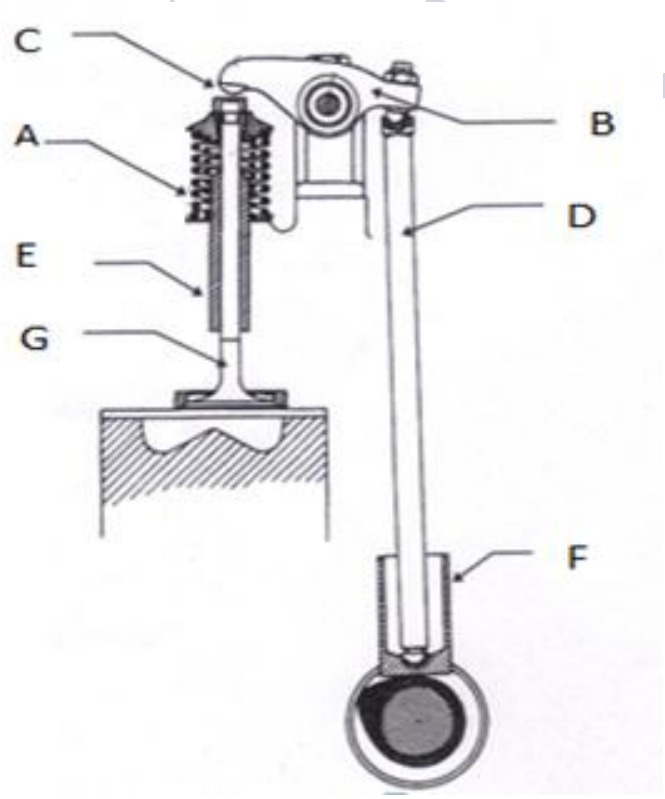

Diagram 1

QUESTION 2

2.1 Name FIVE important items that must be included on a job card. (5)

2.2 State any THREE vital points that should be included in an accident register. (3)

2.3 Give FOUR differences in construction between a fluid coupling and a torque converter. (8)

2.4 Briefly describe the operation of a stator under each of the following conditions:

2.4.1 Acceleration (3)

2.4.2 Cruising speed (2)

2.5 List FOUR advantages of a fluid clutches over a friction clutch. (4)
[25]

QUESTION 3

3.1 State SIX disadvantages of a fuel injection system when compared to a conventional carburetor system. (6)

3.2 Draw a neat electronic ignition system that uses a photo-electronic cell. The following must be clearly indicted and label on the sketch.

3.2.1 The transistor with the emitter, collector and base correctly labelled and how it is connected in the circuit. (4)

3.2.2 The diagram must also show the Battery, Primary Coil, and the photo electric cell (6)

3.3 Describe how a power-steering system is bled after having been repaired. (4)

3.4 List THREE possible causes of low steering pump pressure. (3)

3.5 Name TWO functions of a steering damper. (2)
[25]

Copyright reserved

QUESTION 4

4.1 Make a sectional line sketch of a brake band and drum with an activating system as found in an automatic gearbox. Name ALL the parts. (10)

4.2 Explain why some vehicles are equipped with each of the following drive wheel arrangements:

4.2.1 Tandem drive (2)

4.2.2 Differential lock mechanism (2)

4.3 Briefly explain how the differential action is limited when using a conventional differential in a vehicle. (5)

4.4 State TWO disadvantages of each of the following types of camshaft drives:

4.4.1 Chain drives (2)

4.4.2 Gear drives (2)

4.4.3 Belt drives (2)

[25]

TOTAL: 100

Copyright reserved