higher education & training

Department:
Higher Education and Training
REPUBLIC OF SOUTH AFRICA

MARKING GUIDELINE

NATIONAL CERTIFICATE

AUGUST EXAMINATION

MOTOR TRADE THEORY N2

22 JULY 2014

This marking guideline consists of 6 pages.

Copyright reserved

QUESTION 1

1.1 CV joints are smoother in operation with less vibration and kickback at steering.
CV joints can operate through larger range of angles.
Inner CV joints are like slip joints.
Protected from dirt and water.
Keeps grease in. (3)

1.2 The components would be laid out in an order below and then inspected for any wear damage and the faulty part replaced. The bearings will also be changed.

Input Shaft
Cluster shaft/gear
Second Gear
Synchroniser Sleeve
Synchroniser Hub
Main/Output shaft (6)

1.3
- Incorrect clutch adjust. Binding Clutch
- Worn/Damaged synchroniser unit
- Worn shaft, bearings, selector mechanism.
- Low oil in gearbox (4)

1.4 The interlocking device prevents two gears being selected at the same time so as to prevent gearbox locking up or breaking. (1)

1.5

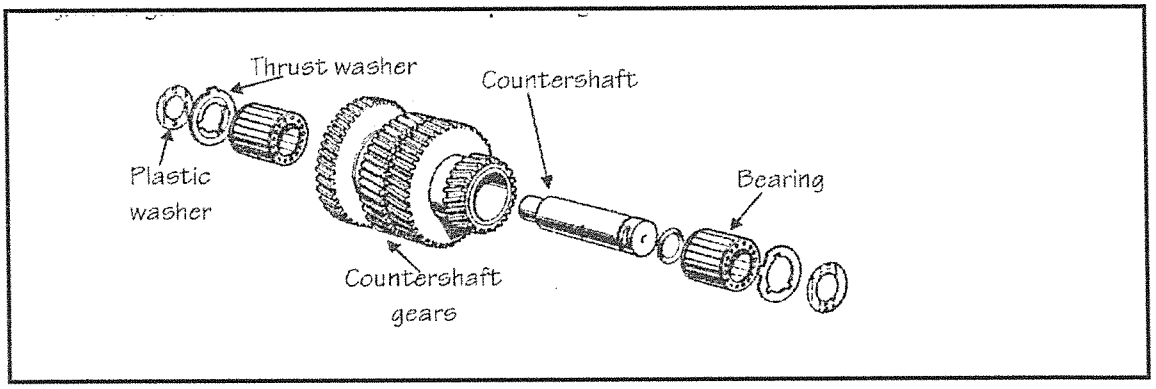

(6)
[20]

Copyright reserved

QUESTION 2

2.1 Negative camber is the inward tilt of the wheel and tyre assembly when viewed from the front of the car.

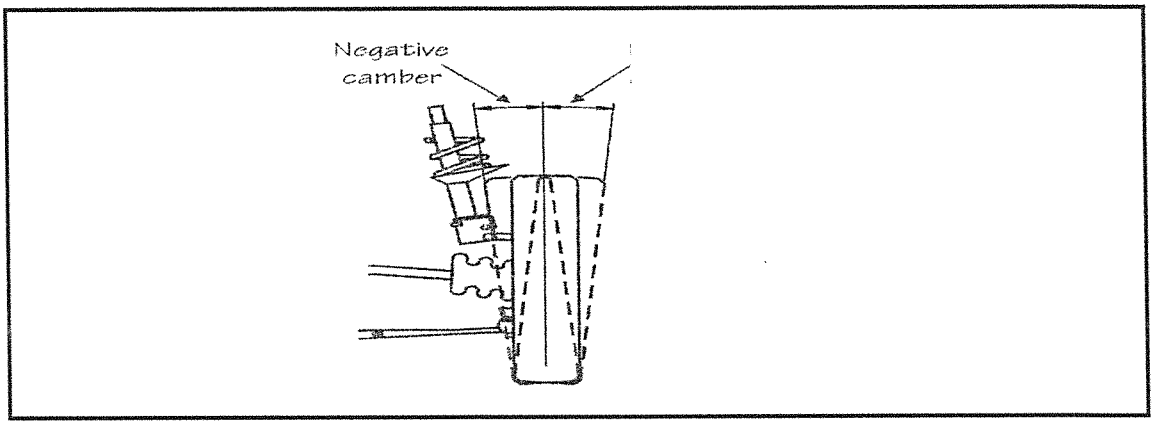

(4)

2.2
- Ball joints
- Steering knuckle
- Camber/castor rods
- Rims,
- Tyres
- Wheel Bearings
- Stabilizer bar

(3)

2.3
- Provide steering stability
- Reduces steering effort
- Reduces tyre wear

(Any 2 x 1) (2)

2.4
- Can be easily uprated by addition of leaves
- Simple connection to axel and body
- Relatively cheap to manufacture and maintain

(3)

2.5
- Check vehicle frame for bend and damage
- Check suspension/spring heights
- Check tyre pressure and type: radial or Cross ply
- Check suspension components for wear, damage. Steering box free play.

(Any 3 x 1) (3)

2.6 Kerb mass is the full operating mass of vehicle with fuel, oil and water all full. (2)

2.7 Lock stop is the maximum angular movement of the wheels and prevents the wheels from touching body or suspension when turned full either to left or right. (3)

[20]

Copyright reserved

QUESTION 3

3.1 3.1.1
- Ignition Coil
- Condenser
- Battery
- Spark plug
- Rotor

3.1.2
- Transform low battery voltage 12 V to high voltage
- Reduce arcing of points.
- Supplies 12 volts
- Provides spark into combustion chamber.
- Rotates high voltage from coil to spark plug (2 x 5) (10)

3.2 The various numbers and letters in a spark plug code or identification number basically identify the features and functions of a particular plug. Included would be information such as plug type, heat rating, construction, thread diameter, thread reach and firing end construction.

- Diameter and reach
- Seat sealing and radio interference
- Heat range
- Firing and configuration
- Resistor or non-resistor (4)

3.3 It is the period that the points are closed and is measured in degrees. It is the period that the coil builds up a magnetic field. There is an inverse relation between dwell angel and point gap. (3)

3.4
- We need to protect the engine from dust particles so the cleaner limits or prevents dust particles entering the intake.
- The intake has a suction noise that can be quite loud especially in Diesel Engines. The air cleaner tones downs the suction noise.
- The air cleaner covering acts as a flame arrestor in case engine back fires. (3)

[20]

QUESTION 4

4.1
- It must maintain an even viscosity through a wide range of temperatures.
- It must not corrode metal parts or damage rubbers.
- It must be hygroscopic – absorb moisture.
- It must have high boiling point and low freezing point. (4)

4.2 The unit within the master cylinder is the check valve.
The check valve assembly is to maintain a standing pressure to prevent air or dirt entering the system.
Keeps pedal free play to a minimum.
Keeps wheel cylinder seal lips in light contact with cylinder bore to avoid leakage or air entry.
Prevents re-entry of fluid back to master cylinder. (4)

Copyright reserved

4.3 Fixed caliper
Floating/swivel type caliper (2)

4.4 The overspill could have occurred if you did not control the back flow of the fluid by removing cap or placing cloth over reservoir. This is possibly the damage the customer is referring to, to his vehicle paintwork.

As the brake pads wear, the piston moves out against the pads and the space is filled with brake fluid. When you replace the brake pads, the piston has to be moved back to accommodate new brake pads and this displaces the brake fluid back to the reservoir and possible overspill if the reservoir was already filled to specifications. (4)

4.5 Self-energisation is when the brake shoe is forced about the anchor point into the drum brake and the force of friction against the rotating drum produces a wedge or lever effect and in essence gives the shoe a self-servo action. (3)

4.6
- Air in system
- Soft brake hoses
- Shoes not centred or brake drums cracked (3)

[20]

QUESTION 5

5.1 5.1.1
A Venturi
B Vacuum
C Petrol nozzle
D Air
E Vent for atmospheric pressure
F Petrol/Petrol Bowl/Float Bowel (6)

5.1.2 A Downdraft Carburettor (2)

5.2
- Can be mounted anywhere on vehicle.
- It is easier to push fuel then pull it and thereby eliminate vapour locks.
- Irrespective of engine speed fuel pump pressure can be high or pre-set to driving or engine requirements. (3)

5.3
- The strength of spring and diaphragm
- Type of fuel system, i.e. carburettor or fuel injection. (2)

5.4
- Low octane fuel
- Overheated engine
- Spark plugs have too high heat range
- High idle speed, throttle valve not closing
- Faulty idle cut off valve (Any 4 x 1) (4)

Copyright reserved

5.5
- Engine coolant at operating temperature
- Warm air
- Electric heating element

(3)
[20]

TOTAL: 100

Copyright reserved