higher education & training

Department:
Higher Education and Training
REPUBLIC OF SOUTH AFRICA

T1140(E)(N11)T
NOVEMBER EXAMINATION

NATIONAL CERTIFICATE

MOTOR TRADE THEORY N1

(11040651)

11 November 2014 (Y-Paper)
13:00–16:00

This question paper consists of 10 pages.

ENGINEERING

Copyright reserved

DEPARTMENT OF HIGHER EDUCATION AND TRAINING
REPUBLIC OF SOUTH AFRICA

NATIONAL CERTIFICATE
MOTOR TRADE THEORY N1
TIME: 3 HOURS
MARKS: 100

INSTRUCTIONS AND INFORMATION

1. Answer ALL the questions.
2. Read ALL the questions carefully.
3. Number the answers according to the numbering system used in this question paper.
4. ALL sketches must be provided with the necessary labels.
5. Correct spelling and terminology are important.
6. Start each question on a NEW page.
7. Write neatly and legibly.

ENGINEERING

Copyright reserved

QUESTION 1

1.1 Various options are provided as possible answers to the following questions. Choose the answer and write only the letter (A–D) next to the question number (1.1.1–1.1.10) in the ANSWER BOOK.

1.1.1 One of the advantages of good housekeeping is …

A poor ventilation.
B hazardous atmospheric conduction.
C inadequate supports.
D keeping work areas neat and orderly.

1.1.2 Safety signs used in industries are classified into groups or designations.

State the designation that PV stands for:

A Warning signs
B Information signs
C Prohibitive signs
D Fire-equipment warning signs

1.1.3 The most common hammer used in an automotive workshop is a …

A ball-peen hammer.
B soft-face hammer.
C lump hammer.
D mallet hammer.

1.1.4 The … change(s) the reciprocating movement of the piston into rotary motion.

A connecting rod
B crankshaft
C piston rings
D compression rings

1.1.5 The timing chain is the connection between the …

A camshaft and crankshaft.
B big-end bearing and crankshaft.
C small-end bearing and crankshaft.
D timing cover and gasket.

1.1.6 A measuring instrument which is both accurate and versatile:

A The telescopic gauge
B The dial gauge
C The feeler gauge
D The plastigauge

ENGINEERING

Copyright reserved

1.1.7 The correct sequence of strokes in a four-stroke petrol engine is:

A Power, Induction, Exhaust and Compression strokes
B Induction, Compression, Power and Exhaust strokes
C Compression, Exhaust, Power and Induction strokes
D Induction, Power, Compression and Exhaust strokes

1.1.8 Dilution of motor oil can be very detrimental to an engine and its components.

One cause of engine dilution of motor oil is …

A varnish formation.
B reduction of oil viscosity.
C low oil pressure.
D leaking injection.

1.1.9 One of the causes of engine overheating is …

A air cooling of oil.
B water cooling of oil.
C exhaust restriction.
D bypass of valve.

1.1.10 One of the advantages of a tubeless tyre is …

A radial ply.
B cross ply.
C less vibration.
D ply rating.

(10 × 1) (10)

1.2 FIGURE 1 shows a sketch of the parts of an internal combustion engine.

Name the labelled parts (A–I) in the ANSWER BOOK. (9)

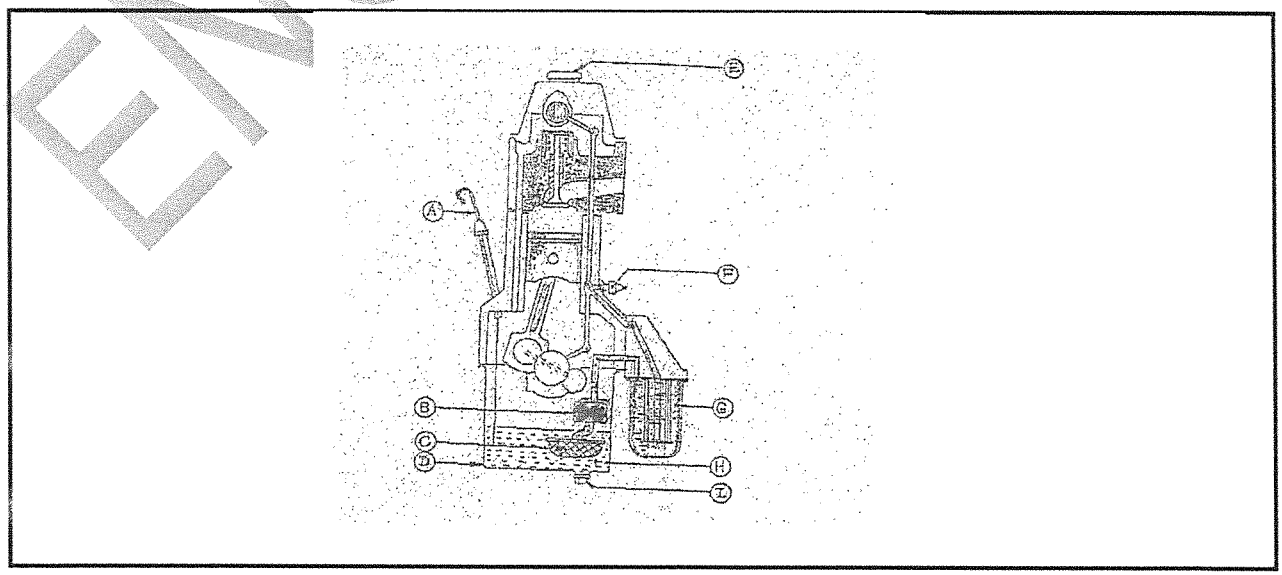

FIGURE 1

ENGINEERING

Copyright reserved

1.3 Name ONE defect on a motor vehicle that can be caused by a faulty lead-acid battery. (1)
[20]

QUESTION 2

2.1 FIGURE 2 below shows a sketch of the parts of an internal combustion engine. (6)

Name the labelled parts (A–F) in the ANSWER BOOK.

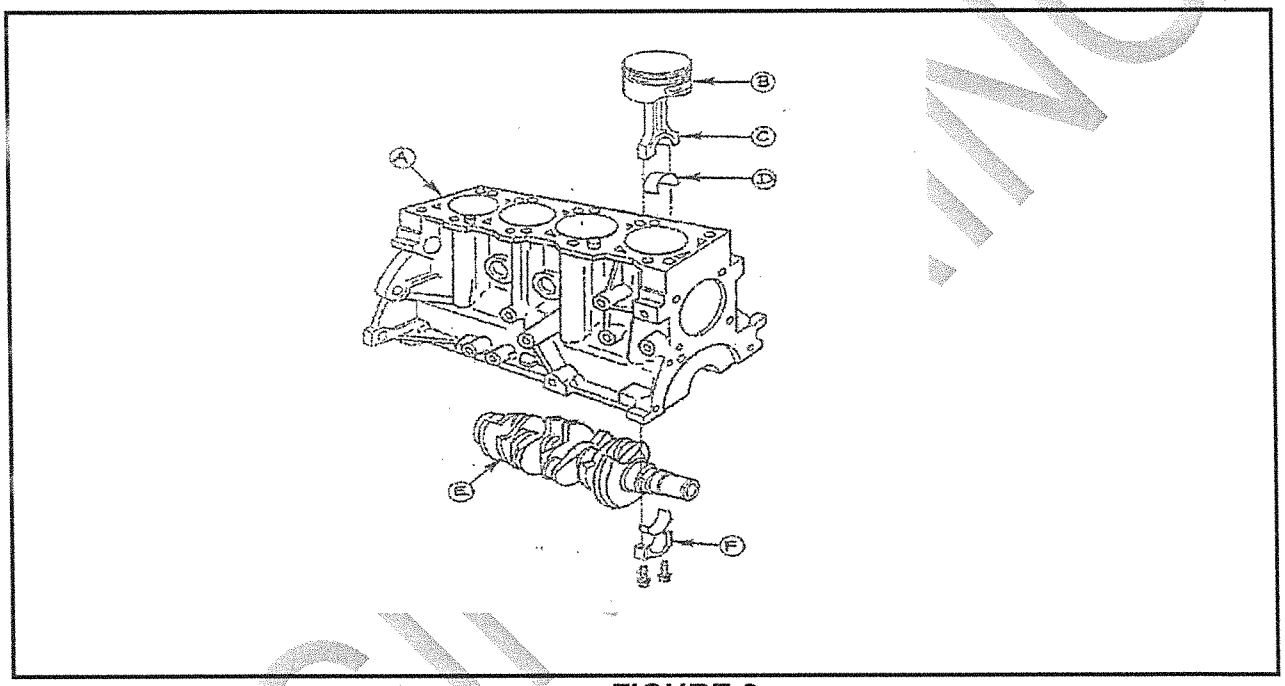

FIGURE 2

2.2 Give TWO reasons for low oil pressure, although there is enough oil in the sump. (2)

2.3 Name TWO types of lubricating systems in the engine of a motor vehicle. (2)

2.4 Make a large neat sketch of a hydrometer suitable to measure the density of the electrolyte in the battery. (5)

2.5 Name TWO methods to connect a battery. (2)

2.6 Name THREE causes of excessive sulphation. (3)
[20]

ENGINEERING

QUESTION 3

3.1 Every engine cylinder normally contains two valves per cycle (one inlet valve and one exhaust valve). In most of today's motor cars, multi-valve technology is used.

Make a neat sketch of a valve and indicate all valve parts. (6)

3.2 Name the TWO types of piston rings. (2)

3.3 Give TWO reasons why a timing guide is important. (2)

3.4 FIGURE 3 below shows the parts of an internal combustion engine.

Name the labelled parts (A–H) (8)

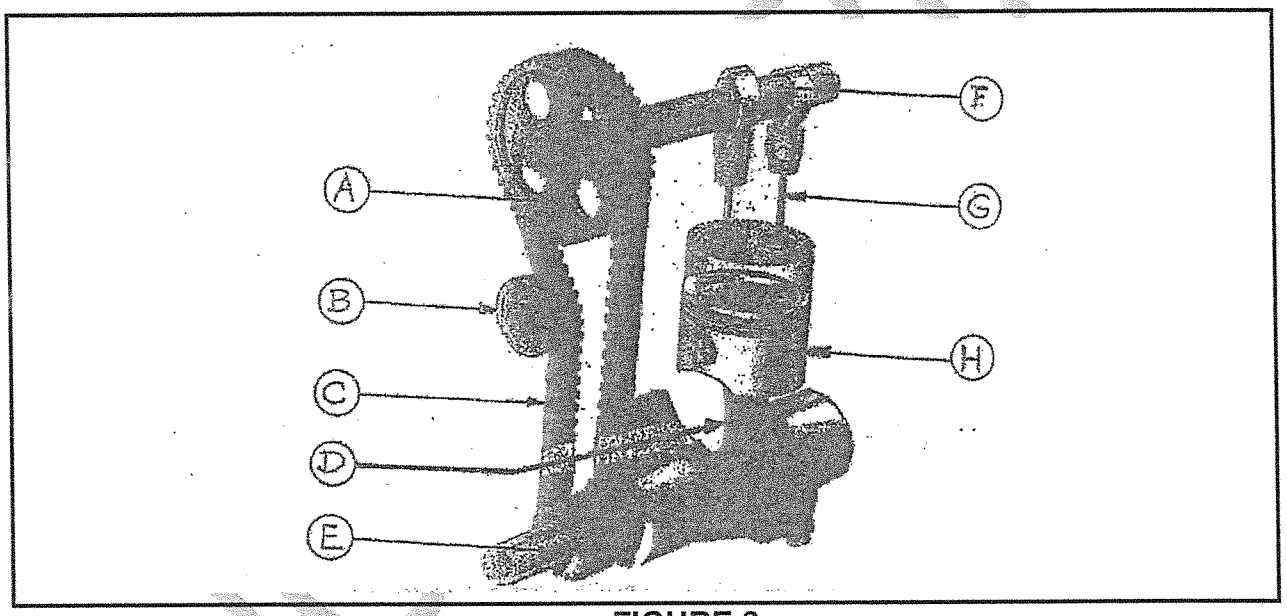

FIGURE 3

3.5 State ONE function of each of the following engine components:

3.5.1 Crankshaft (1)

3.5.2 Flywheel (1)

[20]

ENGINEERING

QUESTION 4

4.1 Indicate whether the following statements are TRUE or FALSE. Choose the answer and write only 'true' or 'false' next to the question number (4.1.1–4.1.5) in the ANSWER BOOK.

4.1.1 Add water to the battery before doing a hydrometer test.

4.1.2 Oil or grease present on the linings causes slip in clutch.

4.1.3 Electrolyte consists of sulphuric acid and distilled water.

4.1.4 One of the tyre's purposes is to offer the maximum rolling resistance to the motion.

4.1.5 The connecting rod changes reciprocating movement into rotary movement of the piston.

(5 × 1) (5)

4.2 State THREE functions of the clutch as used between the engine and gear-box. (3)

4.3 State THREE safety precautions that a mechanic must take to ensure his/her personal safety in the workshop. (3)

4.4 State FOUR causes of accidents in the workshop. (4)

4.5 State FIVE causes of rattles, ticks or knocks inside the bell housing. It happens when the engine is started and the clutch operated. (5)

[20]

QUESTION 5

5.1 Make a neat, labelled sketch of TWO 12 V batteries connected in parallel. Clearly indicate the total voltage available from this arrangement. (2 x 2) (4)

5.2 FIGURE 4 below shows two sketches of tyre-ply constructions.

Name the ply constructions shown in each of the sketches (A and B) in the ANSWER BOOK. (2)

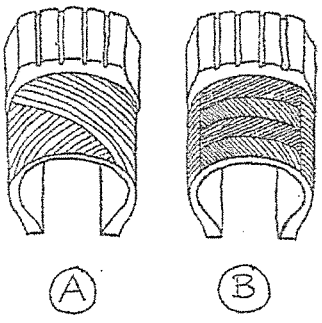

FIGURE 4

ENGINEERING

5.3 State TWO reasons why correct tyre pressure should be maintained. (2)

5.4 State THREE advantages of tubeless tyres. (3)

5.5 FIGURE 5 below shows various tools used in the workshop.

Name the tools marked (5.5.1–5.5.9)

5.5 5.5.1

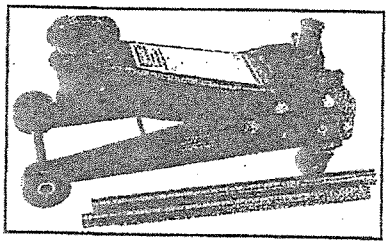

5.5.2

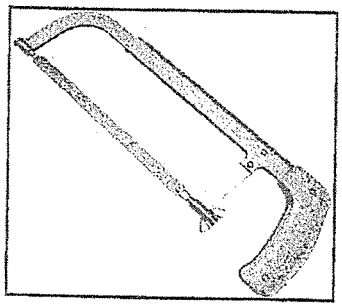

5.5.3

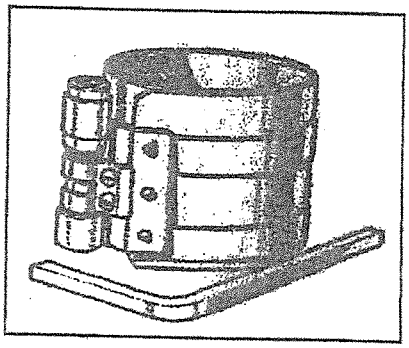

5.5.4

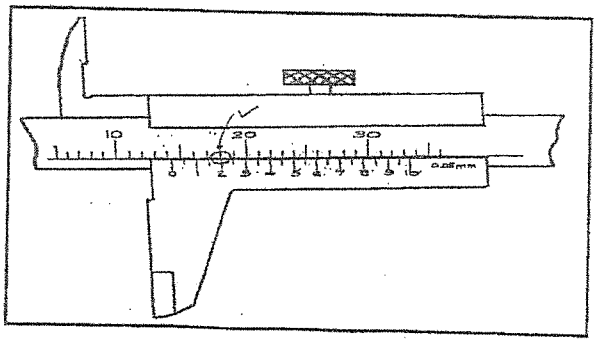

ENGINEERING

Copyright reserved

5.5.5

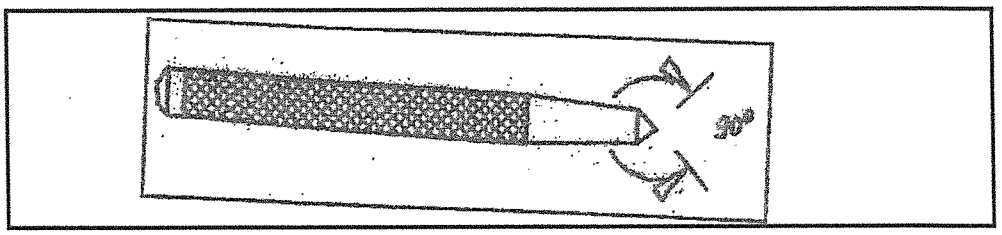

5.5.6

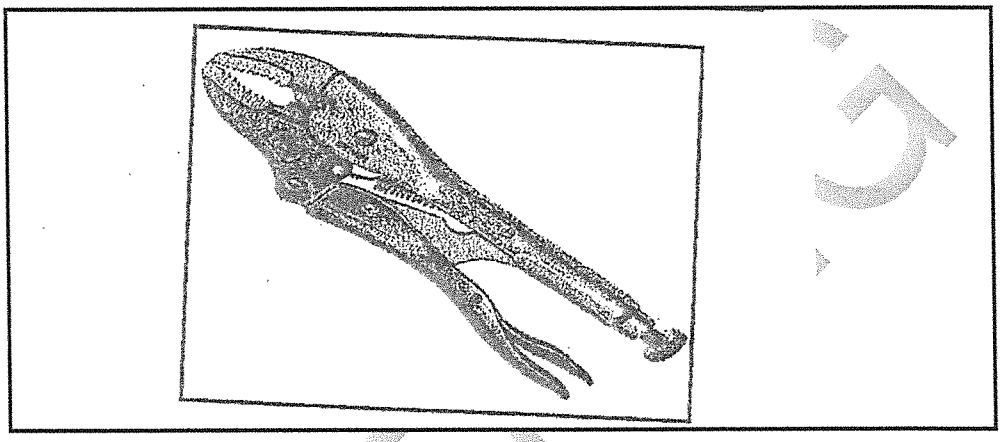

5.5.7

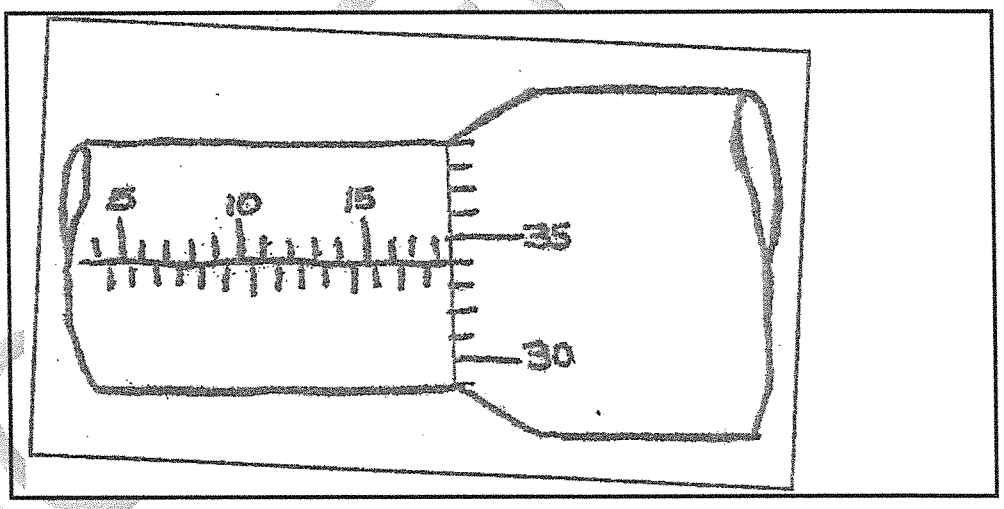

ENGLISH

Copyright reserved

5.5.8

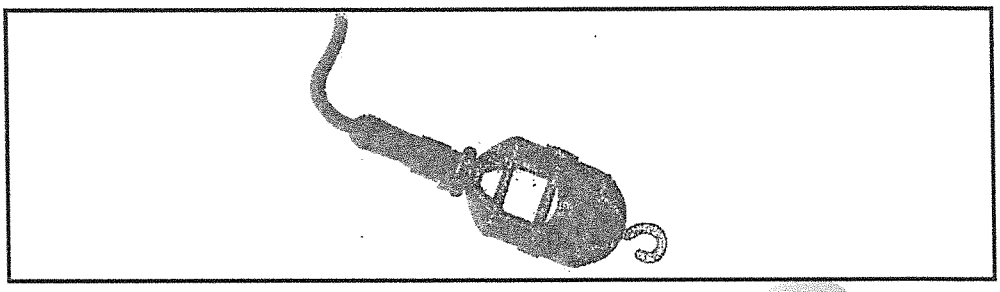

5.5.9

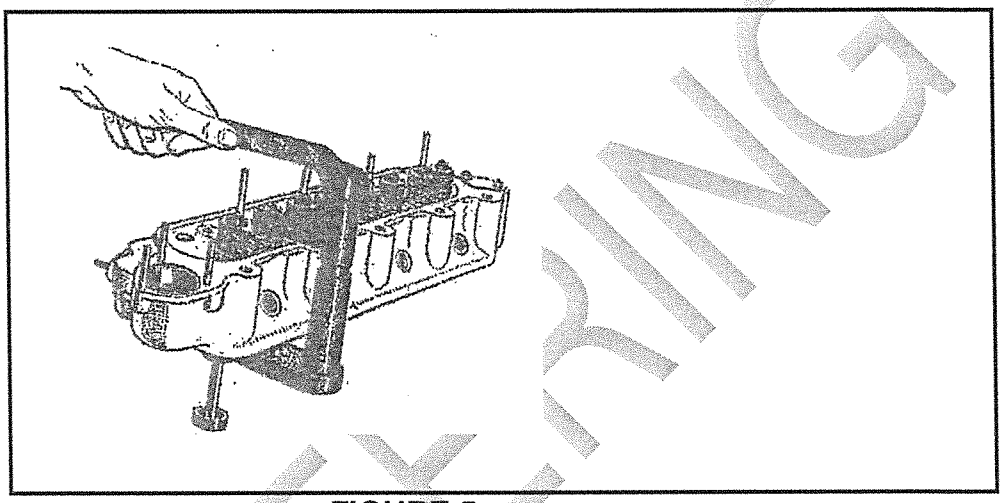

(9)
[20]

FIGURE 5

TOTAL: 100

ENGINEERING

Copyright reserved