20130417241

higher education & training

Department:
Higher Education and Training
REPUBLIC OF SOUTH AFRICA

T1210(E)(M27)T
APRIL EXAMINATION

NATIONAL CERTIFICATE

MOTOR TRADE THEORY N1

(11040651)

27 March 2013 (X-Paper)
09:00–12:00

Calculators may NOT be used.

This question paper consists of 10 pages.

Copyright reserved

DEPARTMENT OF HIGHER EDUCATION AND TRAINING
REPUBLIC OF SOUTH AFRICA

NATIONAL CERTIFICATE
MOTOR TRADE THEORY N1
TIME: 3 HOURS
MARKS: 100

INSTRUCTIONS AND INFORMATION

1. Answer ALL the questions.
2. Read ALL the questions carefully.
3. Number the answers according to the numbering system used in this question paper.
4. ALL sketches must be provided with the necessary labels.
5. Correct spelling and terminology are important, for example, do not use 'bottom' for oil sump.
6. Start each question on a NEW page.
7. Marks indicated are percentages.
8. Write neatly and legibly.

Copyright reserved

QUESTION 1

1.1 Various options are given as possible answers to the following questions. Choose the answer and write only the letter (A–D) next to the question number (1.1.1–1.1.10) in the ANSWER BOOK.

1.1.1 The file which is used to make internal slots and rectangular holes is a ...

A bastard file.
B Second-cut file.
C flat file.
D square file.

1.1.2 The main function of the piston is to ...

A drive the clutch assembly.
B convert the reciprocating motion to rotary motion.
C drive the gearbox.
D conduct heat to the cooler cylinder walls.

1.1.3 During the ... piston reaches close to top dead centre and the spark plug ignites the mixture and force the piston downwards.

A exhaust stroke
B induction stroke
C power stroke
D compression stroke

1.1.4 ... allows the vehicle to be driven through front wheels and found on front-wheel drive cars.

A Rear-wheel drive
B Front-wheel drive
C Constant velocity joint
D Universal joint

1.1.5 Its function/purpose is to create a partial vacuum in the air passage.

A Butterfly valve
B Venture
C Float chamber
D Needle valve and seat

1.1.6 It is also known as computer box.

A Vacuum sensor
B Knock sensor
C Throttle position sensor
D Electronic control unit

Copyright reserved

1.1.7 It is the small space between moving engine parts for the lubricating oil film and allows oil to enter the bearing to prevent part contact.

A Oil wedge
B Viscosity
C Oil clearance
D SAE number

1.1.8 Its main function is to help the engine reach its normal operating temperature much quicker.

A Water pump
B Cowl
C Thermostat
D Fan motor

1.1.9 Pedal hard to depress is caused by ...

A mis-aligned cable or linkage.
B worn wheel bearing.
C wrong piston size.
D inner edge tyre wear.

1.1.10 Two 12-volt batteries are connected in series to form ...

A 12 volts.
B 24 volts.
C 6 volts.
D 18 volts.

(10 × 1) (10)

1.2 Briefly explain the operation of a four-stroke petrol engine, considering the position of the valves and piston during ALL four strokes. (5)

Copyright reserved

1.3 FIGURE 1 below, shows a component of an engine. Name the parts marked (A–D) in the ANSWER BOOK.

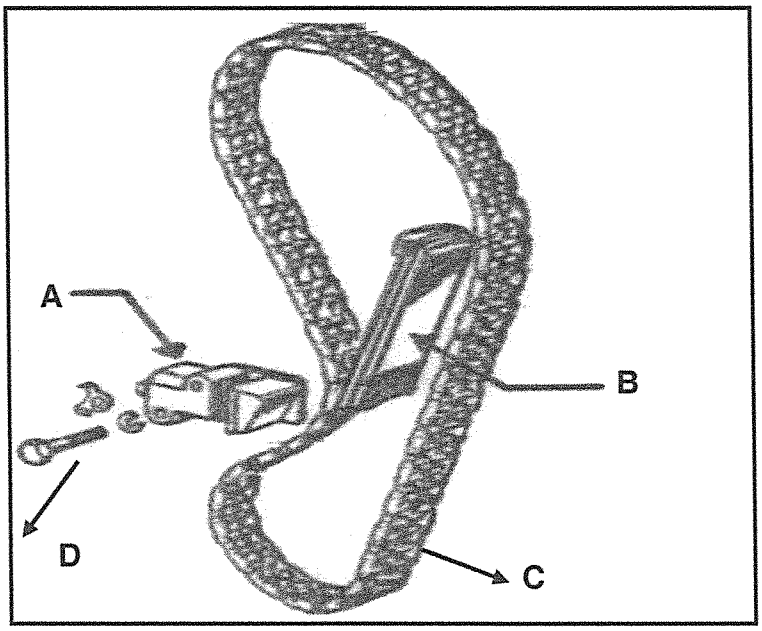

FIGURE 1 (4)

1.4 State the function of the part marked **A**. (1)
[20]

QUESTION 2

2.1 FIGURE 2 below, shows a sketch of a crankshaft of an internal combustion petrol engine. Name the parts marked (A–F) in the ANSWER BOOK.

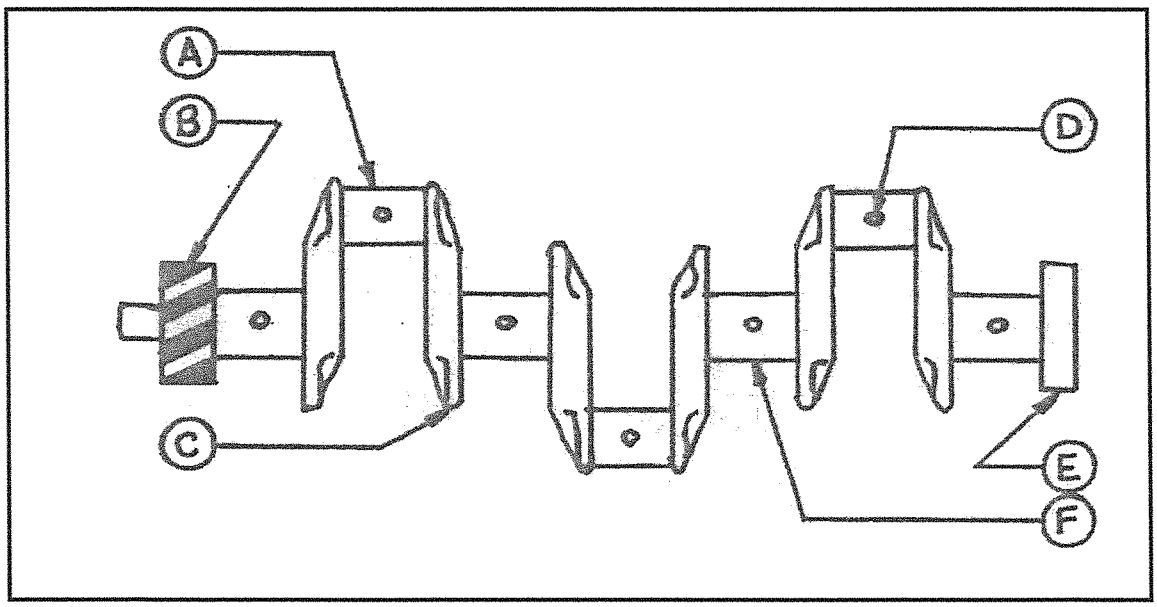

FIGURE 2 (6)

Copyright reserved

2.2 State ONE function of each of the following engine components:

2.2.1 Crankshaft (1)

2.2.2 Flywheel (1)

2.2.3 Camshaft (1)

2.2.4 Valve (1)

2.3 Every engine cylinder normally contains two valves per cylinder (one inlet valve and one exhaust valve). In most of today's motor cars, multi-valve technology is used. Make a neat sketch of a valve and indicate ALL valve parts. (6)

2.4 Name the TWO types of piston rings. (2)

2.5 Give TWO reasons why timing guide is important. (2)
[20]

QUESTION 3

3.1 State TWO advantages of front engine, rear-wheel drive arrangement. (2)

3.2 State TWO disadvantages of a front engine, front-wheel drive arrangement. (2)

3.3 Make a neat sketch of the rear axle of a front engine, rear-wheel drive arrangement and label ALL the components. (6)

3.4 FIGURE 3 below, shows the section plunger-type oil pump. Name the parts by writing the answer next to the letter (A–F) in the ANSWER BOOK.

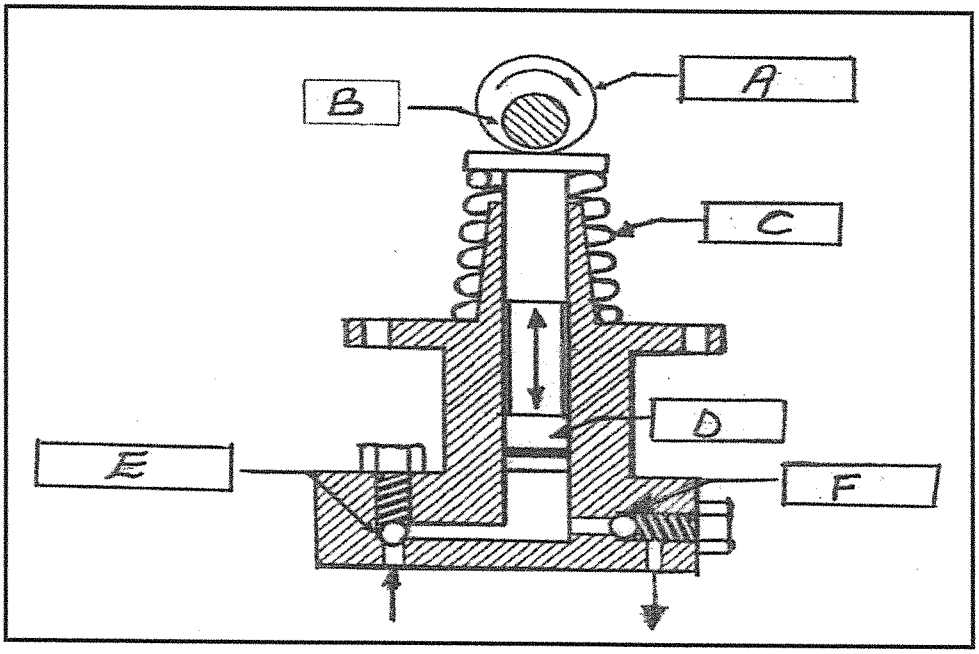

FIGURE 3 (6)

Copyright reserved

3.5 State ONE function of each of the following components:

3.5.1 Oil pump

3.5.2 Oil sump

3.5.3 Oil filter

3.5.4 Oil seal

(4)
[20]

QUESTION 4

4.1 Indicate whether the following statements are TRUE or FALSE. Choose the answer and write only 'true' or 'false' next to the question number (4.1.1–4.1.5) in the ANSWER BOOK.

4.1.1 A cracked cylinder head assembly will cause water to be drawn into the cylinder when the engine is switched off.

4.1.2 It is a well-known fact that water boils and evaporates at 120 °C at sea level.

4.1.3 One of the reasons of pedal hard depress is binding parts needing lubrication.

4.1.4 A battery cell is made up of three sets of lead plates.

4.1.5 Safety goggles may be used when using a grinder.

(5 × 1) (5)

4.2 Give TWO differences between *a four-stroke petrol* and *a four-stroke diesel* engine taking into consideration the induction stroke and compression stroke. (4)

4.3 What does SAE stand for? (1)

Copyright reserved

4.4 FIGURE 4 below, shows a cooling system of an internal combustion engine. Name the parts by writing each answer next to the letter (A–G) in the ANSWER BOOK.

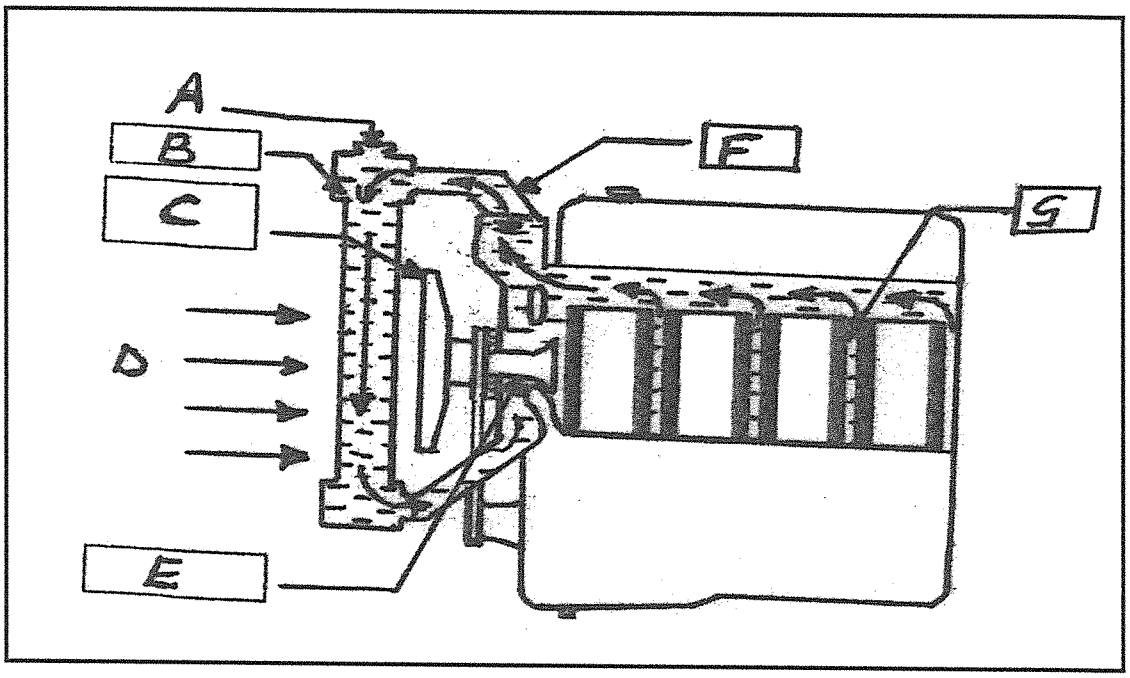

(7)

FIGURE 4

4.5 State THREE types of fans in the cooling system of a combustion engine. (3)

[20]

QUESTION 5

5.1 State THREE functions of motor vehicles tyres. (3)

5.2 State TWO types of motor vehicle tyres. (2)

5.3 State the cause of tread wear patterns under the following:

5.3.1 Rapid wear occurs at the shoulder of the tyre.

5.3.2 Rapid wear occurs at the side of the tyre.

5.3.3 Rapid wear occurs at the centre of the tyre.

(3 x 1) (3)

5.4 All tyres have markings on their walls with each marking meaning a different thing. Explain THREE meanings of this tyre marking indicated: 195/75SR14. (3)

5.5 Sulphating is the formation of lead sulphate on the surface of both positive and negative plates. State TWO causes of excessive sulphating in the battery plates. (2)

Copyright reserved

5.6 FIGURES 5.6.1–5.6.7 below, show various tools used in the workshop. Name the tools and write the answer next to the number (5.6.1–5.6.7) in ANSWER BOOK.

5.6.1

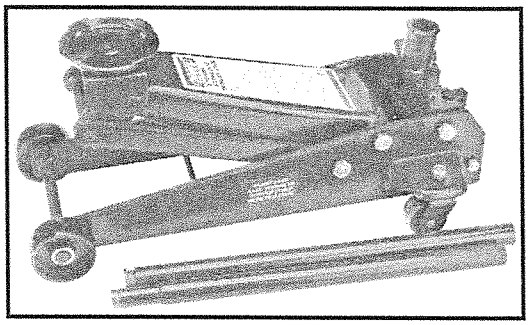

5.6.2

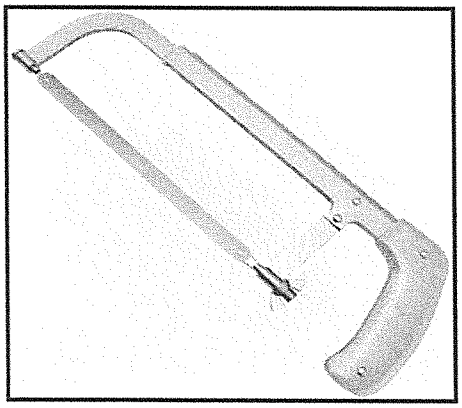

5.6.3

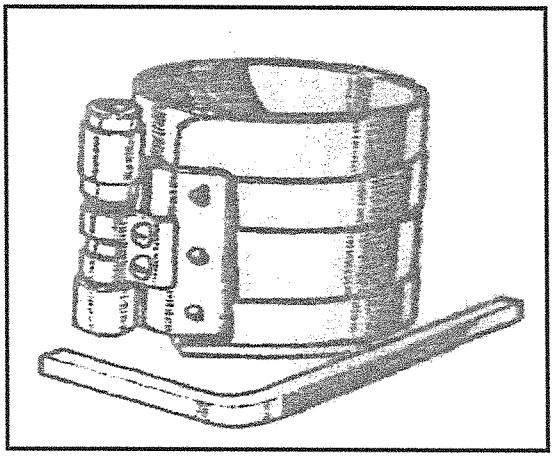

5.6.4

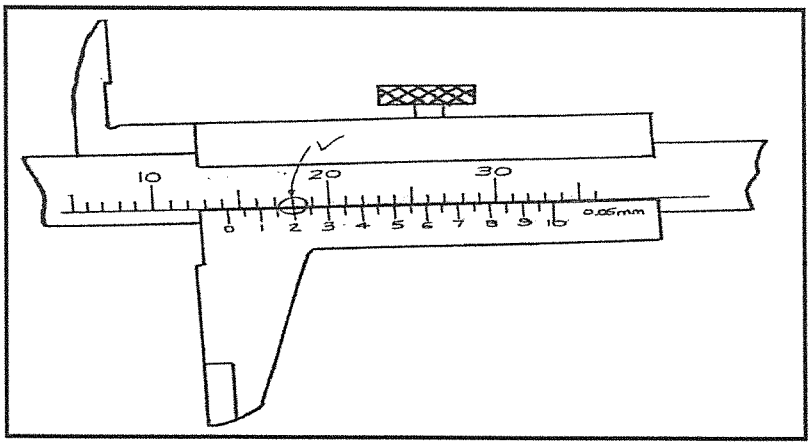

Copyright reserved

5.6.5

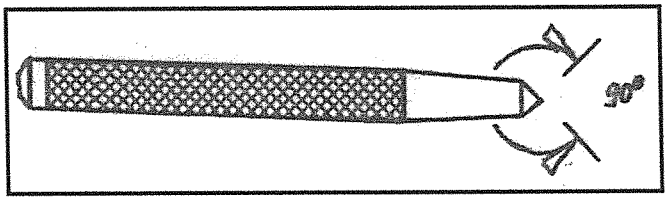

5.6.6

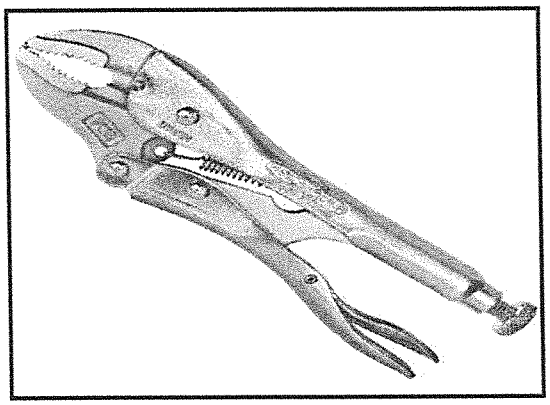

5.6.7

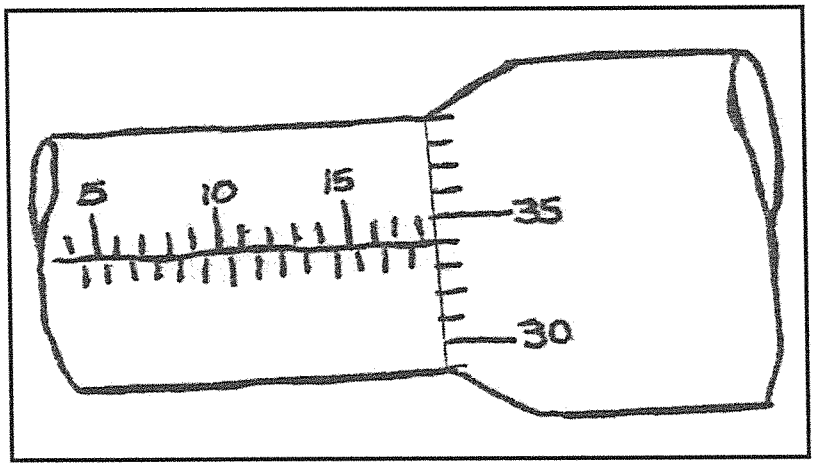

(7)
[20]

TOTAL: 100

Copyright reserved