higher education & training

Department:
Higher Education and Training
REPUBLIC OF SOUTH AFRICA

NATIONAL CERTIFICATE

MOTOR TRADE THEORY N1

(11040651)

2 August 2021 (X-paper)
09:00–12:00

Drawing instruments may be used.

This question paper consists of 8 pages.

150Q1G2102

Copyright reserved

DEPARTMENT OF HIGHER EDUCATION AND TRAINING
REPUBLIC OF SOUTH AFRICA

NATIONAL CERTIFICATE
MOTOR TRADE THEORY N1
TIME: 3 HOURS
MARKS: 100

INSTRUCTIONS AND INFORMATION

1. Answer all the questions.
2. Read all the questions carefully.
3. Number the answers according to the numbering system used in this question paper.
4. Start each section on a new page.
5. Only use a black or blue pen.
6. Write neatly and legibly.

Copyright reserved

SECTION A

QUESTION 1

1.1 Various options are given as possible answers to the following questions. Choose the answer and write only the letter (A–D) next to the question number (1.1.1–1.1.10) in the ANSWER BOOK.

1.1.1 An unplanned and uncontrolled event caused by unsafe acts or conditions is known as …

A a hazard.
B an accident.
C a risk.
D a dangerous occurrence.

1.1.2 A benefit of good housekeeping is …

A improved productivity.
B excessive waste material.
C tools and material left on machines.
D congested aisles.

1.1.3 The common colour of danger signs is …

A red.
B orange.
C green.
D yellow.

1.1.4 To widen holes on a steel plate, you need a …

A needle file.
B flat file.
C square file.
D round file.

1.1.5 This item is not included in a normal socket set:

A Offset spanner
B Ratchet
C Extension bar
D Sliding T-bar

1.1.6 The telescopic gauge is used to measure …

A acute angles.
B thickness of plates.
C small inside diameters.
D outside diameters.

Copyright reserved

1.1.7 The component that determines the valve lift in an engine:

A Rocker arm
B Pushrod
C Valve lifter
D Cam lobe

1.1.8 The battery of an electric vehicle can be charged by the following method:

A The alternator
B An external charging inlet socket
C An amplifier
D An on-board computer

1.1.9 Which component changes the reciprocating motion of the piston into rotary motion?

A Crankshaft
B Camshaft
C Flywheel
D Connecting rod

1.1.10 The voltage of a fully charged 12 V lead-acid battery is …

A 12 V
B 13,6 V
C 12,6 V
D 12,2 V

(10 × 1) (10)

1.2 Indicate whether the following statements are TRUE or FALSE by writing only 'True' or 'False' next to the question number (1.2.1–1.2.10) in the ANSWER BOOK.

1.2.1 The four-stroke cycle delivers power during all four strokes.

1.2.2 The turbocharger increases volumetric efficiency of an engine.

1.2.3 A hydrometer is used to measure the specific gravity of the battery electrolyte.

1.2.4 Most batteries used in modern cars are maintenance free.

1.2.5 Under-inflated tyres improve the ride quality.

1.2.6 Superchargers are driven off the exhaust gases.

1.2.7 Fixed cooling fans consume more engine power than electric fans.

Copyright reserved

1.2.8 Removing the thermostat is the best advice for solving an overheating problem.

1.2.9 Exhaust manifolds are normally manufactured from an aluminium alloy.

1.2.10 The function of the water pump is to assist in the flow of coolant through the engine and radiator.

(10 × 1) (10)
[20]

TOTAL SECTION A: 20

SECTION B

QUESTION 2

2.1 Name the specific eye protection to be worn in the following operations:

2.1.1 Working with a grinder

2.1.2 When welding

(2 × 1) (2)

2.2 List THREE precautions to be taken before working underneath a vehicle. (3)

2.3 Give the meaning of the following safety signs:

2.3.1



2.3.2

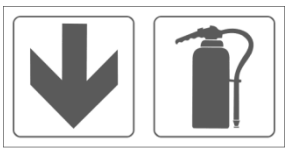

2.3.3

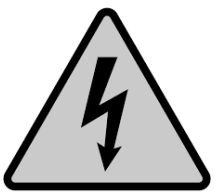

2.3.4 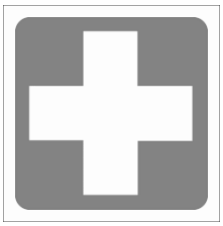

(4 × 1) (4)

2.4 What are the following tools used for?

2.4.1 Dial gauge

2.4.2 Compression tester

2.4.3 Feeler gauge

2.4.4 Vernier calliper

(4 × 1) (4)

2.5 Give the reading indicated on the vernier calliper shown in FIGURE 1 below.

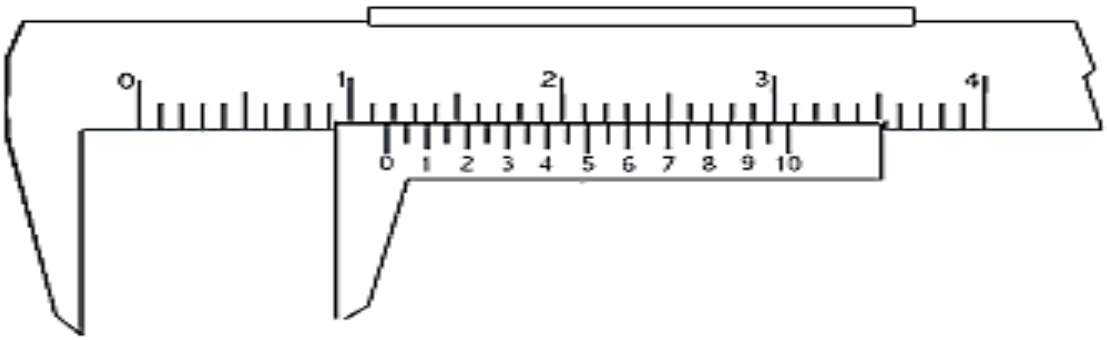

FIGURE 1

(2)
[15]

QUESTION 3

3.1 Name THREE methods by which the camshaft can be driven by the crankshaft. (3)

3.2 Name the TWO most common materials engine blocks are made of. (2)

3.3 What do the following abbreviations refer to?

3.3.1 DOHC

3.3.2 OHV

(2 × ½) (1)

3.4 Label the diagram in FIGURE 2 below by writing only the answer next to the question number (3.4.1–3.4.8) in the ANSWER BOOK.

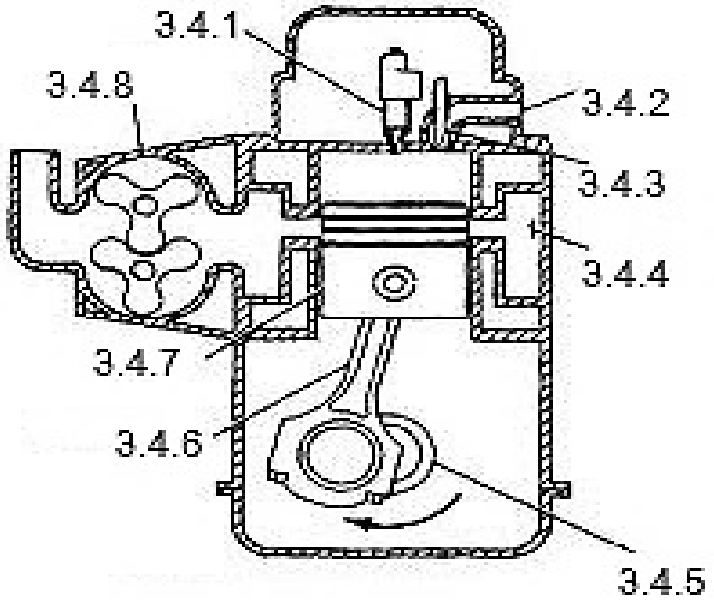

FIGURE 2 (8)

3.5 Which component closes the valve after the camshaft has opened the valve? (1)
[15]

QUESTION 4

4.1 Explain the term *viscosity*. (1)

4.2 What does the abbreviation PCV mean? (1)

4.3 Give TWO disadvantages of the plunger type oil pump. (2)

4.4 List FOUR functions of lubricating oil. (4)

4.5 Make a neat, labelled sketch of an external gear type oil pump. Indicate the direction of gear rotation and ports. (7)
[15]

QUESTION 5

5.1 Explain the basic principle of the thermo-syphon cooling system. (3)

5.2 Name the part that controls the engine operating temperature. (1)

5.3 Radiator shutters are sometimes installed on radiators.

Explain the function of the shutters. (2)

Copyright reserved

5.4 Describe the difference between *down-flow* and *cross-flow radiators*. (2)

5.5 List SIX components in a vehicle's water cooling system. (6)

5.6 What is the function of the fins around the cylinder on a two-stroke engine? (1)
[15]

QUESTION 6

6.1 FIGURE 3 below shows a complete exhaust system on a modern motor car.

Label the components (A–E) in the ANSWER BOOK.

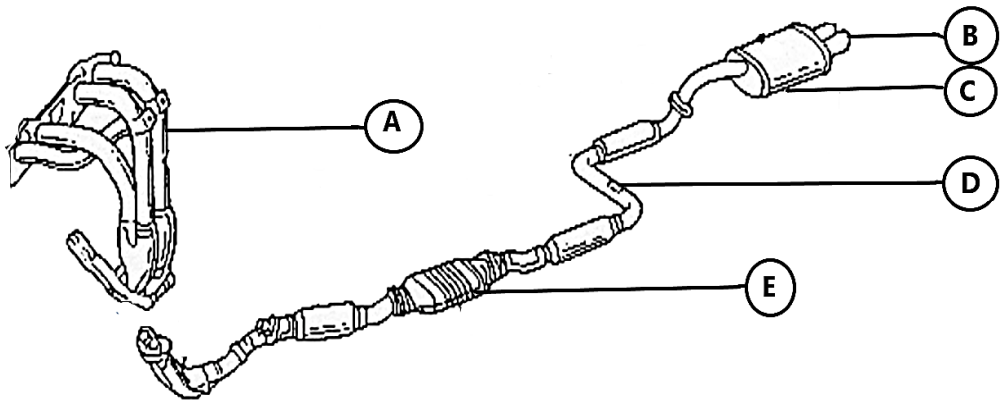

FIGURE 3 (5)

6.2 Briefly describe the operation of a turbocharger unit. (3)

6.3 Explain the term *sulphation* as it occurs in lead acid batteries. (3)

6.4 List FOUR battery tests that can be carried out while doing routine battery maintenance. (4)

6.5 Describe the *regenerative braking system* as used in hybrid and electrical vehicles. (5)
[20]

TOTAL SECTION B: 80
GRAND TOTAL: 100

Copyright reserved