higher education & training

Department:
Higher Education and Training
REPUBLIC OF SOUTH AFRICA

T1220(**E**)(J31)T

NATIONAL CERTIFICATE

MOTOR TRADE THEORY N1

(11040651)

31 July 2018 (X-Paper)
09:00–12:00

This question paper consists of 5 pages.

Copyright reserved

DEPARTMENT OF HIGHER EDUCATION AND TRAINING
REPUBLIC OF SOUTH AFRICA

NATIONAL CERTIFICATE
MOTOR TRADE THEORY N1
TIME: 3 HOURS
MARKS: 100

INSTRUCTIONS AND INFORMATION

1. Answer ALL the questions.
2. Read ALL the questions carefully.
3. Number the answers according to the numbering system used in this question paper.
4. All sketches must be drawn neat and in good proportion.
5. All answers including sketches must be done in the ANSWER BOOK.
6. Write neatly and legibly.

Copyright reserved

QUESTION 1

1.1 Name THREE categories of safety signs. (3)

1.2 What is the standard colour used for fire fighting signs? (1)

1.3 How do you distinguish a prohibitive sign from other safety signs? (2)

1.4 Write down what the following information signs mean:

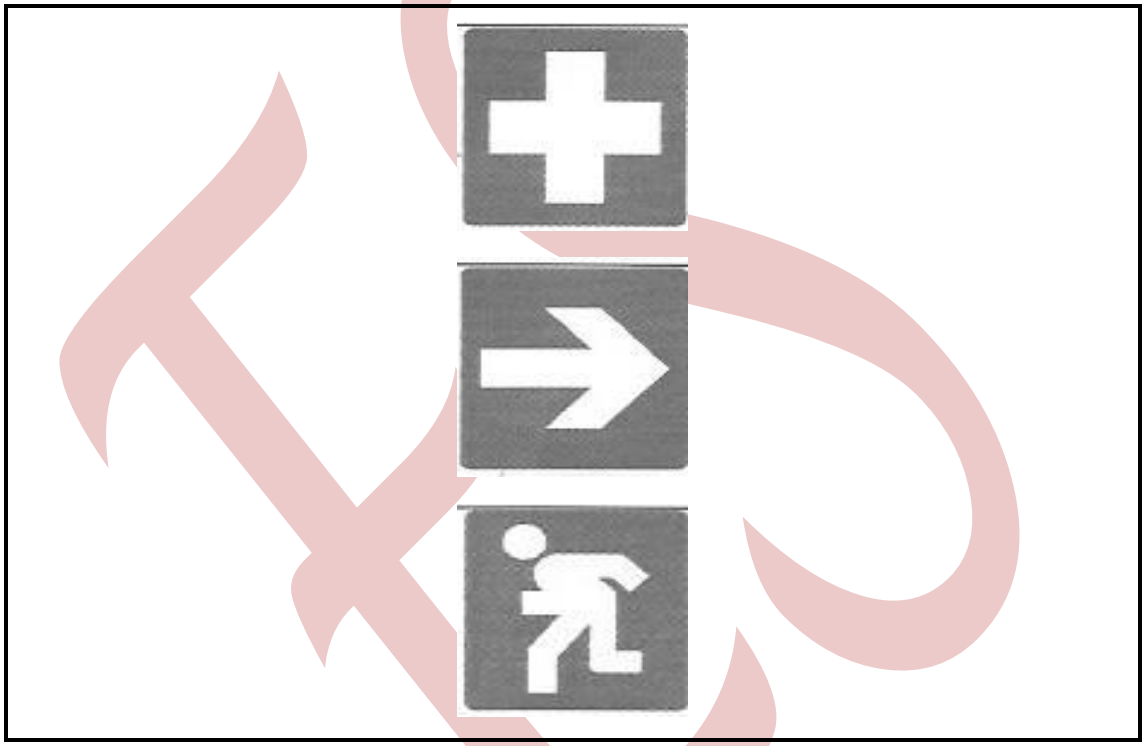

(3)

1.5 Name THREE types of lifting equipment used in a motor workshop. (3)

1.6 List THREE advantages of pneumatic (air) tools over electric power tools. (3)

1.7 Which measuring instrument is used to measure the valve clearance on overhead valve engines? (1)

1.8 Draw a simple sketch of a depth gauge showing a reading of 5,65 mm. (Only draw the sleeve and thimble.) (4)

1.9 State whether the following statements are 'True' or 'False':

1.9.1 A hydraulic press is used to install engine main bearings.

1.9.2 A dial gauge is the instrument used to measure radial run-out on brake discs.

1.9.3 Warning signs are triangular in shape.

Copyright reserved

1.9.4 Insufficient lighting and ventilation is an unsafe act.

1.9.5 Every employee has the responsibility to take reasonable care of themselves and other workers.

(5 × 1) (5)
[25]

QUESTION 2

2.1 Name TWO types of flat-base rims. (2)

2.2 Explain the difference in the construction of drop-center and flat-base rims. (5)

2.3 Name the TWO types of materials used to manufacture battery casings. (2)

2.4 Fully explain the process when jumpstarting a vehicle. (4)

2.5 Draw a simple sketch of a hydrometer. (Insert THREE labels.) (6)
[19]

QUESTION 3

3.1 Make a simple line sketch of a poppet valve. (Insert THREE labels.) (6)

3.2 What is the main function of the crankshaft? (2)

3.3 With the aid of a sketch, explain the inlet stroke of a 4-stroke diesel engine. (8)

3.4 Write down the function of the valve spring. (2)

3.5 Name TWO types of roller chains used in camshaft drive mechanisms. (2)
[20]

QUESTION 4

4.1 The quality of engine oil is improved by adding enhancing additives.

Name FOUR types of such additives. (4)

4.2 Which type of lubricating system is commonly used in modern engine design? (1)

4.3 What is the reason for fitting an oil cooler to a car engine? (1)

4.4 Explain in detail why engine oil should be changed at regular intervals. (6)

4.5 Neatly sketch a ball and spring oil pressure relief valve. (Insert TWO labels.) (4)
[16]

Copyright reserved

QUESTION 5

5.1 Name the TWO metals used to manufacture radiator cores. (2)

5.2 State the TWO functions of the radiator cap. (2)

5.3 List FIVE components of a water-cooled cooling system. (5)

5.4 The FIGURE below shows a clutch master cylinder. Identify the parts A–G.

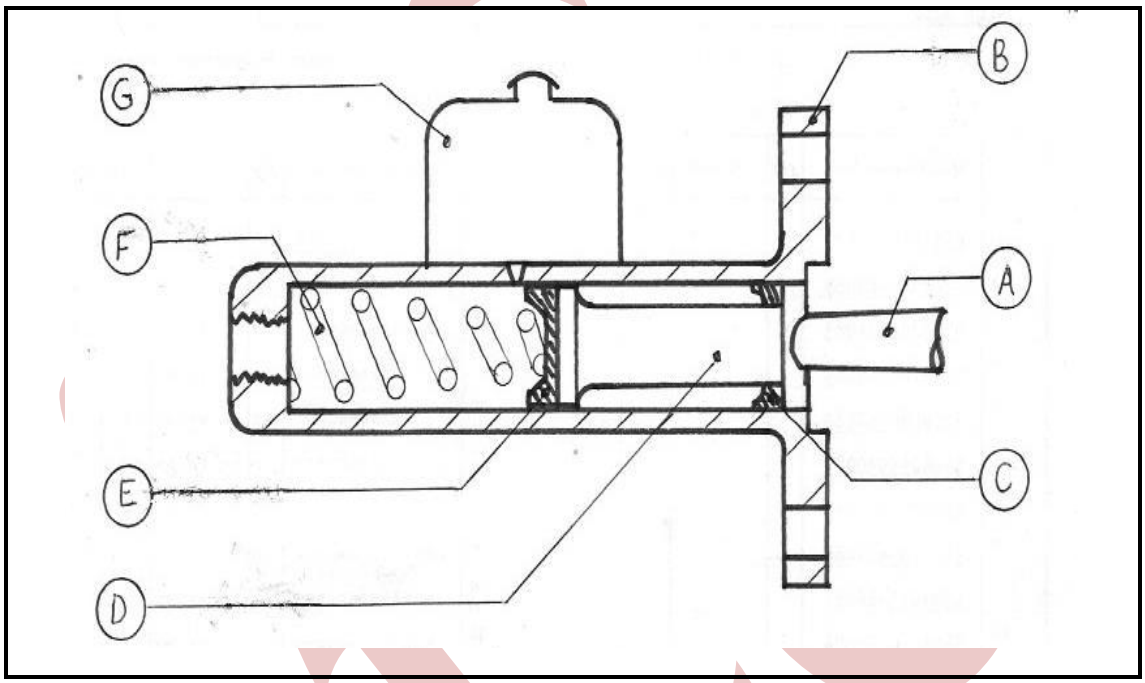

(7)

5.5 Name the TWO types of pressure plates generally used in cars. (2)

5.6 Which engine component also forms part of the clutch assembly? (1)

5.7 What type of fluid is used in the hydraulic clutch operating system? (1)

[20]

TOTAL: 100

Copyright reserved