higher education & training

Department:
Higher Education and Training
REPUBLIC OF SOUTH AFRICA

T1230**(E)**(A6)T

NATIONAL CERTIFICATE

MOTOR ELECTRICAL THEORY N2

(11040612)

6 August 2019 (X-Paper)
09:00–12:00

This question paper consists of 5 pages and 1 formula sheet.

Copyright reserved

DEPARTMENT OF HIGHER EDUCATION AND TRAINING
REPUBLIC OF SOUTH AFRICA

NATIONAL CERTIFICATE
MOTOR ELECTRICAL THEORY N2
TIME: 3 HOURS
MARKS: 100

INSTRUCTIONS AND INFORMATION

1. Answer ALL the questions.
2. Read ALL the questions carefully.
3. Number the answers according to the numbering system used in this question paper.
4. Sketches must be large, neat and fully labelled.
5. Write neatly and legibly.

Copyright reserved

QUESTION 1

1.1 A 12 volt battery fitted to a motorcycle has an EMF of 14 volts while the motorcycle travels at a constant speed. When the headlamp is switched on it draws 5 A and the tail lamp draws 0,5 A.

Calculate the following:

1.1.1 Combined current drawn by both lamps (2)

1.1.2 Resistance of each lamp if the potential difference is 13,5 volts (4)

1.1.3 Combined resistance of both lamps (2)

1.2 Explain *internal resistance* of a cell. (2)
[10]

QUESTION 2

2.1 A single conductor of a generator armature is 200 mm long. The conductor moves at right angles through a magnetic field with a flux density of 0,25 tesla at a speed of 40 kilometres per hour.

Calculate the following:

2.1.1 EMF induced in the conductor (4)

2.1.2 Total EMF produced if the armature has 30 conductors (2)

2.2 State TWO possible causes of burnt armature windings and field coil windings in a starter motor. (4)

2.3 State TWO possible faults that may be present in a defective brush holder of a starter motor. (2)

2.4 Explain the purpose of the overrunning clutch found in the drive of a pre-engaged-type starter motor. (2)

2.5 Define each of the following terms:

2.5.1 Mutual induction

2.5.2 Lenz's law

2.5.3 Electromagnetic induction

2.5.4 Self-induction

2.5.5 Faraday's law

(5 × 2) (10)
[24]

Copyright reserved

QUESTION 3

3.1 Explain the purpose of each of the following solenoid components:

3.1.1 Plunger

3.1.2 Hold-in coil

3.1.3 Pull-in coil

3.1.4 Moving contact

(4 × 2) (8)

3.2 Explain how you would test the pull-in coil and the hold-in coil of a starter solenoid. (4)

3.3 Name TWO parts of an integrated starter motor solenoid. (2)

3.4 Identify the components of a starter motor in the picture below. Write the answer next to the number (1–6) in the ANSWER BOOK.

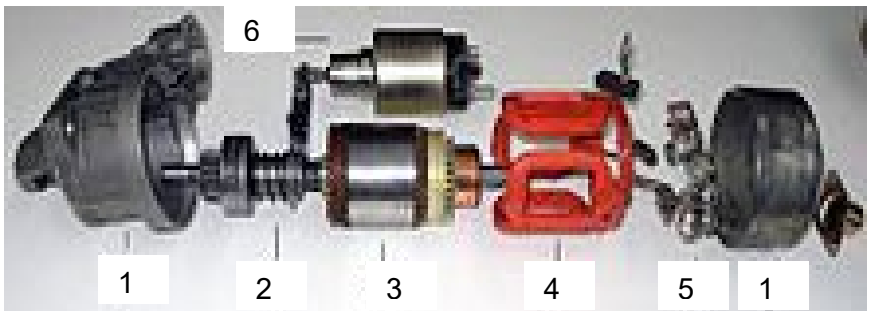

(6)

3.5 Explain the procedure to test a starter motor on a test bench. (8)

3.6 3.6.1 State the purpose of brushes in a starter motor (2)

3.6.2 Name TWO materials used in the composition of brushes. (2)

[32]

QUESTION 4

4.1 Choose the correct word/words between brackets. Write only the word/words next to the question number (4.1.1–4.1.6) in the ANSWER BOOK.

4.1.1 Doping of semiconductor material is done to convert the material from a (pure to an impure/pure to pure) state.

4.1.2 EMF is the value of the voltage in a circuit that is (on/off) load.

4.1.3 A generator converts (mechanical/electrical to electrical) energy.

Copyright reserved

4.1.4 A silicon diode is a (semiconductor/bimetal) material.

4.1.5 A (shunt-/series-) wound motor is preferred in starter motors.

4.1.6 A full-wave rectification circuit using four diodes is sometimes referred to as a (bridge/fridge) circuit.

(6 × 2) **[12]**

QUESTION 5

5.1 Draw a neat, labelled diagram of an NPN-transistor using a low-voltage direct-current input to operate a relay that switches direct current to a direct-current load. (6)

5.2 List SIX components of a heavy-duty workshop battery charger (except the diodes). (6)

5.3 Describe a *transistor*. (2)

5.4 What is the minimum voltage necessary across a silicon diode connected in forward bias for the diode to conduct? (2)

5.5 What is the difference between a *transistor* and a *relay*? (2)

5.6 State TWO reasons why silicon diodes are preferred over germanium diodes in a workshop battery charger. (4)
[22]

TOTAL: 100

Copyright reserved

(11040612)

FORMULA SHEET

$R_t = R_1 + R_2 + ……..R_n$

$$\frac{1}{Rt} = \frac{1}{R1} + \frac{1}{R2} + ……R_n$$

$$I = \frac{V}{R}$$

$$I = \frac{E}{R+r}$$

$P = VI$

$P = I^2R$

$V = E + Ir$

$E = blv \sin\theta$

$F = bli$

Copyright reserved