higher education & training

Department:
Higher Education and Training
REPUBLIC OF SOUTH AFRICA

NATIONAL CERTIFICATE

MECHANOTECHNICS N5

(8190225)

19 November 2020 (X-paper)
09:00–12:00

This question paper consists of 6 pages and a formula sheet of 3 pages.

161Q1E2019

Copyright reserved

DEPARTMENT OF HIGHER EDUCATION AND TRAINING
REPUBLIC OF SOUTH AFRICA

NATIONAL CERTIFICATE
MECHANOTECHNICS N5
TIME: 3 HOURS
MARKS: 100

INSTRUCTIONS AND INFORMATION

1. Answer all the questions.
2. Read all the questions carefully.
3. Number the answers according to the numbering system used in this question paper.
4. Start each section on a new page.
5. Use only a black or blue pen.
6. Write neatly and legibly.

Copyright reserved

QUESTION 1

FIGURE 1 below shows an epicyclic gear train. Gear wheel D rotates at 1 200 r/min. Gear B and Gear C are keyed to the same shaft.

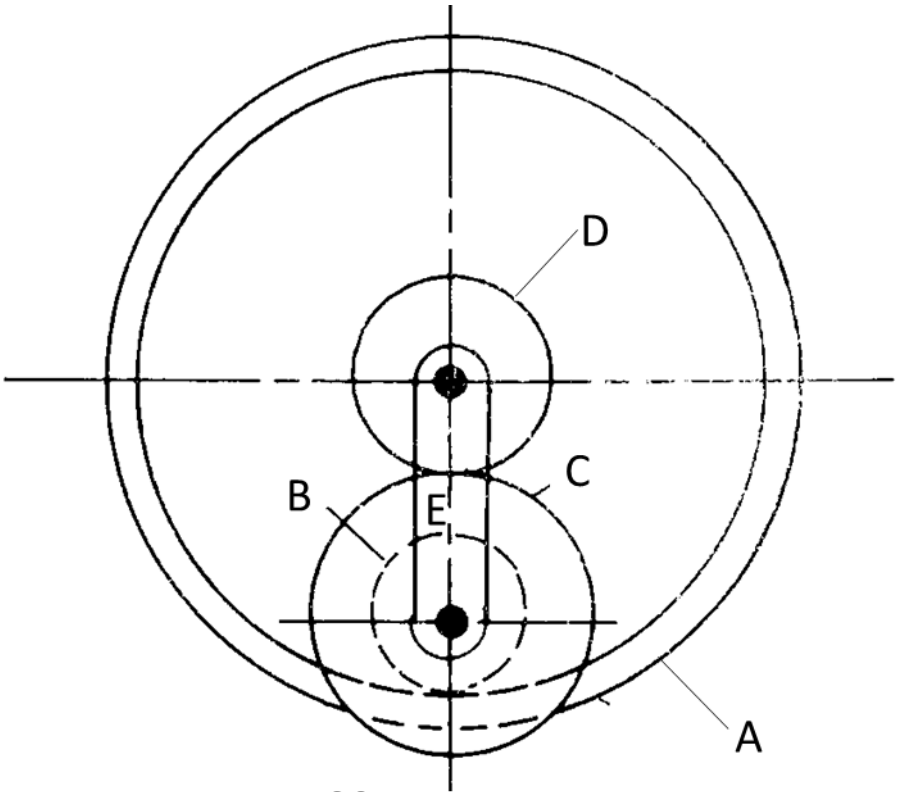

=120 teeth
=30 teeth
=38 teeth
=32 teeth

1.1 Determine the speed of the gearwheel A if arm E is stationery. (8)

1.2 Determine the speed of arm E if gearwheel A is fixed. (4)
[12]

QUESTION 2

2.1 List FOUR functions of reduction gearbox. (4)

2.2 FIGURE 2 below shows a reduction gearbox with a two-start worm, a worm gear and four gears. The worm shaft is connected to an electric motor rotating at 1 200 r/min.

Copyright reserved

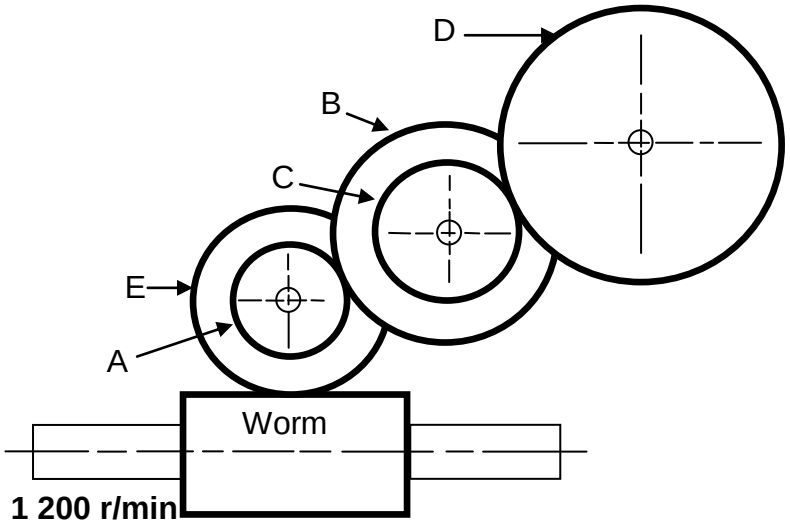

FIGURE 2

Calculate the following:

2.2.1 The speed of the worm gear. (5)

2.2.2 The delivery speed of the gearbox. (3)

2.2.3 The velocity ratio of the gearbox. (3)

[15]

QUESTION 3

3.1 Conveyor belts are equipped with holdback devices. Name THREE common types holdback devices used to stop the conveyor from reversing. (3)

3.2 A vertical flat belt is required to transmit 175 kW at a speed of 1 050 r/min. The pulley has a diameter of 500 mm, the coefficient of friction between the belt and the pulley is 0,3 and the angle of contact is 170°.

Calculate the following:

3.2.1 The effective tension between pulleys. (3)

3.2.2 The tension on the slack-side (T_2) and the tight-side (T_1) (6)

3.2.3 The load on the bearings of the belt. (3)

3.2.4 The motor power if the efficiency of the drive is 80%. (3)

[18]

QUESTION 4

An endless rope haulage is driven by a 80 kW motor under full load conditions. The rope speed is 5 km/h and the distance between the loading and discharging is 950 m. The average gradient is 1 in 10. The empty mass of the trucks is 290 kg and a mass of 700 kg is loaded in a truck. The rope has mass of 3,5 kg/m. A force of 290 N/ton is required to overcome friction. Assume the mechanical efficiency as 75% and calculate the quantity of ore conveyed in an effective shift time of 7 hours. **[19]**

QUESTION 5

5.1 A locomotive hauls a truck at 75 km/h when exerting a steady pull of 850 N on draw bar. Neglect the rolling resistance between the wheels and the rails.

Calculate the following:

5.1.1 The work done in 15 minutes. (4)

5.1.2 The power required. (2)

5.2 An electric locomotive with a total mass of 260 ton is accelerating at 0,06 m/s^2 up an incline of 1 in 120. The rolling resistance is 0,8% of the mass of the train.

Calculate the following:

5.2.1 The tractive effort to overcome frictional resistance. (2)

5.2.2 The tractive effort to overcome gravity. (2)

5.2.3 The tractive effort to accelerate the train. (2)

5.2.4 The power required at a speed of 72 km/h. (4)

5.2.5 The kinetic energy of the locomotive at 72 km/h. (2)

[18]

Copyright reserved

QUESTION 6

6.1 State TWO main differences in the construction of the goods elevator and a passenger elevator. (4)

6.2 The loaded cage of goods hoist has a mass of 1 500 kg. The rope passes over a drum at the top of the shaft and to balance of 600 kg. The cage and balance mass move in guides and friction force at each guide is 600 N. The drum has a diameter of 1,6 m, a mass of 700 kg and a radius of gyration of 0,6 m. The maximum acceleration that occurs at a speed of 2,4 r/s is 1,6 m/s^2.

Calculate the following:

6.2.1 The motor power required to drive the maximum acceleration. (8)

6.2.2 The rope tensions during deceleration if the maximum velocity is 5 m/s and deceleration is at a uniform rate from maximum velocity to rest over the last 4 m of travel. (6)

[18]

TOTAL: 100

Copyright reserved

FORMULA SHEET

1. $m = \frac{PCD}{T}$

2. $DO = m \times (T + 2)$

3. $C = \frac{m}{2} \times (TA + TB)$

4. $Ke = \frac{1}{2} mv^2$

5. $VR = \frac{TA}{TB}$

6. $VR = \frac{PCD\ of\ gear}{PCD\ of\ pinion}$

7. $VR = \frac{NB}{NA}$

8. $NA \times TA = NB \times TB$

9. $Ft = \frac{2 \times T}{PCD}$

10. $Fr = Ft \times Tan\phi$

11. $Fn = Ft \times Sec\phi$

12. $Ie = IA + (VR)^2\ IB + (VR)^2\ IC + (VR)^2\ ID$

13. $T\alpha = Ie \times \alpha A$

14. $T\alpha = TA + \frac{(NB)}{(NA)} \frac{TBC}{\eta 1} + \frac{(ND)}{(NA)} \frac{TD}{\eta 1 \eta 2}$

15. $\frac{NB}{NA} = \frac{\omega B}{\omega A} = \frac{\alpha B}{\alpha A} = \frac{IA}{IB}$

16. $T_{OUTPUT} = T_{INPUT} \times GR \times \eta$

17. $P = \frac{\pi \times PCD}{n}$

18. $Ti + To + Th = 0$

19. $TA = TS + 2TP$

20. $\frac{Input\ speed}{Output\ speed} = \frac{Teeth\ on\ driven\ gears}{Teeth\ on\ driving\ gears}$

21. $v = \pi \times (d + t) \times N$

22. $P = Te \times v$

23. $\frac{T1}{T2} = e^{\mu\theta}$

24. $T1 = \delta \times A$

25. $Tc = m \times v^2$

26. $\frac{T1 - TC}{T2 - TC} = e^{\mu\theta cosec\ \alpha}$

27. $L = \frac{\pi}{2} \times (D + d) + \frac{(D \pm d)^2}{4 \times C} + 2C$

28. $Tg = m \times g \times sin\phi$

29. $v = \omega \times r$

Copyright reserved

30. $v = \sqrt{\mu \times g \times r}$

31. $v = \sqrt{\frac{g \times b \times r}{2 \times h}}$

32. $v = \sqrt{gr\left[\frac{\mu + Tan\,\theta}{1 - \mu Tan\,\theta}\right]}$

33. $v = \sqrt{gr\left[\frac{hTan\theta + b/2}{h - b/2\,tan\,\theta}\right]}$

34. $\frac{T1}{T2} = \left[\frac{1 + \mu Tan\,\theta}{1 - \mu Tan\,\theta}\right]^n$

35. $Cos\,\frac{\theta}{2} = \frac{R - r}{C}$

36. $Cos\,\frac{\phi}{2} = \frac{R + r}{C}$

37. $m = w \times t \times L \times \rho$

38. $T1 = w \times n \times ft$

39. $P = Pg + P\mu$

40. $t = \frac{I \times \omega}{T}$

41. $P = \frac{2 \times \pi \times N \times T}{60}$

42. $T = F \times r$

43. $w = do + 3d - 1{,}5155P$

44. $do = de + 0{,}65P$

45. $w = \frac{\pi \times m}{2}(cos^2\,\theta)$

46. $h = m\left[1 - \frac{\pi}{4}\left(sin\,\theta\,Cos\theta\right)\right]$

47. $\frac{p1}{Rho} + \frac{(v1)^2}{2} + gh1 = \frac{p2}{Rho} + \frac{(v2)^2}{2} + gh2$

48. $Vw\,(Va) = \sqrt{\frac{gx^2}{2y}}$

49. $v = C\sqrt{mi}$

50. $hf = \frac{4 \times f \times \ell \times v^2}{2 \times g \times d}$

51. $hf = \frac{f \times \ell \times O^2}{3{,}026 \times d^5}$

52. $Q = \frac{Cd \times A \times a \times \sqrt{(2gh)}}{\sqrt{(A^2 - a^2)}}$

53. $Q = Cd \times A \times \frac{\sqrt{(2gh)}}{\sqrt{(m^2 - 1)}}$

54. $V = \sqrt{(g \times R \times Cos\theta)}$

55. Vol. bucket = $\frac{m \times s}{\rho \times v}$

56. $L = 2C + \pi D$

57. Self-weight = $\frac{m1 \times g \times S^2}{8 \times h}$

58. One load = $\frac{m2 \times g \times S}{4 \times h}$

59. T (acc load) = (T1 - T2)R

Copyright reserved

60. T (acc drum) = $I \times \alpha = mk^2 \times \frac{a}{R}$

61. P = ω × T

62. ω = 2π × N

63. $Ke = \frac{1}{2} I \times \omega^2$

64. $Ke = \frac{work\ done}{efficiency}$

65. P = Ke × operations/sec

66. $(I_1 + I_2)\ \omega_3 = I_1 \omega_1 + I_2 \omega_2$

67. $\mu = Tan\ \theta$

68. $\eta = \frac{Tan\,\theta}{Tan\,(\theta + \phi)}$

69. T = μ × F × Re × n

70. $T = \frac{\mu \times F \times Re}{sin\,\theta}$

71. T = μ × n × (Fc - S)R

72. Fc = m × ω^2 × γ

73. $\mathrm{Fc} = \frac{\mathrm{mv}^2}{\gamma}$

74. Tractive effort = mass on driving wheels × μ × g

75. Side thrust = $FcCos\,\theta - mg\ Sin\,\theta$

76. $\mu = \frac{FcCos\,\theta - mgSin\,\theta}{mgCos\,\theta + FcSin\,\theta}$

77. $P_l = CmgL + mgh$

Copyright reserved