higher education & training

Department:
Higher Education and Training
REPUBLIC OF SOUTH AFRICA

T1110(**E**)(A3)T

NATIONAL CERTIFICATE

MECHANOTECHNICS N5

(8190225)

3 August 2018 (X-Paper)
09:00–12:00

This question paper consists of 5 pages and a formula sheet of 3 pages.

Copyright reserved

DEPARTMENT OF HIGHER EDUCATION AND TRAINING
REPUBLIC OF SOUTH AFRICA

NATIONAL CERTIFICATE
MECHANOTECHNICS N5
TIME: 3 HOURS
MARKS: 100

INSTRUCTIONS AND INFORMATION

1. Answer ALL the questions.
2. Read ALL the questions carefully.
3. Number the answers according to the numbering system used in this question paper.
4. Sketches must be large, neat and fully labelled.
5. Write neatly and legibly.

Copyright reserved

QUESTION 1

1.1 A locomotive has a mass of 100 ton, 70% of which is supported by the driving wheels. The coefficient of adhesion friction between the wheels and the rails is 0,3 and the rolling resistance is 80 N/ton of the mass of the locomotive. The 500-ton mass of the locomotive is hauled by the trucks and the rolling resistance of 70 N/ton at a constant speed.

Calculate the following:

1.1.1 The tractive effort of the locomotive (3)

1.1.2 The total rolling resistance of the locomotive and the trucks (3)

1.1.3 The tractive effort of the locomotive required to haul the trucks on a level track at a constant speed (1)

1.1.4 The tractive effort of the locomotive required to haul the trucks up an incline of 1 in 90 at a constant speed (3)

1.1.5 The acceleration required to accelerate the locomotive and the trucks up the incline (3)

1.1.6 The braking force required by the locomotive, if only the locomotive is supplied with brakes, to decelerate the locomotive and the trucks in 3 minutes from 43,3 km/h to 32,4 km/h down the incline of 1 in 90 (4)

[17]

QUESTION 2

2.1 Calculate the torque required to increase the speed of a flywheel with a mass of 1 400 kg and a radius of gyration of 820 mm from 100 r/min to 130 r/min in 35 seconds. (8)

2.2 A flywheel has a mass of 600 kg and a radius gyration of 830 mm.

Calculate the following:

2.2.1 The kinetic energy required to give the flywheel a speed of 95 r/min from rest (2)

2.2.2 The uniform torque required to accelerate the flywheel from 48r/min to 108 r/min (2)

2.2.3 The time required for this acceleration (3)

[15]

Copyright reserved

QUESTION 3

3.1 State FOUR advantages of employing a suspended electromagnet device to remove scrap iron from a conveyor belt transporting non-metal loads. (4)

3.2 The coefficient of friction between a driving pulley and a flat belt is 0,25 and the belt width is 120 mm. The diameter of the driving pulley is 700 mm and its speed is 750 r/min. The thickness of the belt is 4 mm and the maximum allowable tension exerted on the belt must not exceed 2,5 N/mm width. The density of the belt material is $1,2 \times 10^3$ kg/m^3 and the angle of wrap between the belt and the driving pulley is 160°. The efficiency of the drive is 90%.

Calculate the following:

3.2.1 The speed of the belt (2)

3.2.2 The mass of the belt (2)

3.2.3 The centrifugal force (2)

3.2.4 Tension on both sides taking centrifugal force into account (6)

3.2.5 The output power transmitted by the driver (2)
[18]

QUESTION 4

A bucket elevator used to transport coal has the following details:

Centre distance between the head and the tail pulley is 80 m with a bucket spacing of 700 mm. At a chain speed of 95 m/min, a mass of 1 300 tonnes is transported in an effective shift time of 7 hours. The discharge of the coal takes place at 30° after top dead centre.

Calculate the following:

4.1 The diameter of the head pulley (6)

4.2 The total length of the chain
Assume the same diameter for both head and tail pulleys.
Ignore the deflection of the chain given by the tensioning device. (2)

4.3 The driving motor power required if the drive is 75% efficient (10)
[18]

Copyright reserved

QUESTION 5

Endless rope haulage is required to deliver 900 tonnes of rock per eight-hour shift over a distance of 960 m on an average incline of 12°. An empty tub has a mass of 300 kg and a full tub has a mass of 1 200 kg. The speed of the rope is 2,8 km/h and its mass is 4 kg/m. The track resistance is assumed to be 220 N per ton and the mechanical efficiency is 75%.

Calculate the following:

5.1 The total number of tubs required (4)

5.2 The mass in conveyance (5)

5.3 The motor power (7)

[16]

QUESTION 6

FIGURE 1 below shows an epicyclic gear train with gear wheel D held stationary and arm B rotating at 200 r/min. Gears E and F are fixed together and rotate freely on the pin which is attached to the arm. Gear wheel G is rigidly attached to shaft C.

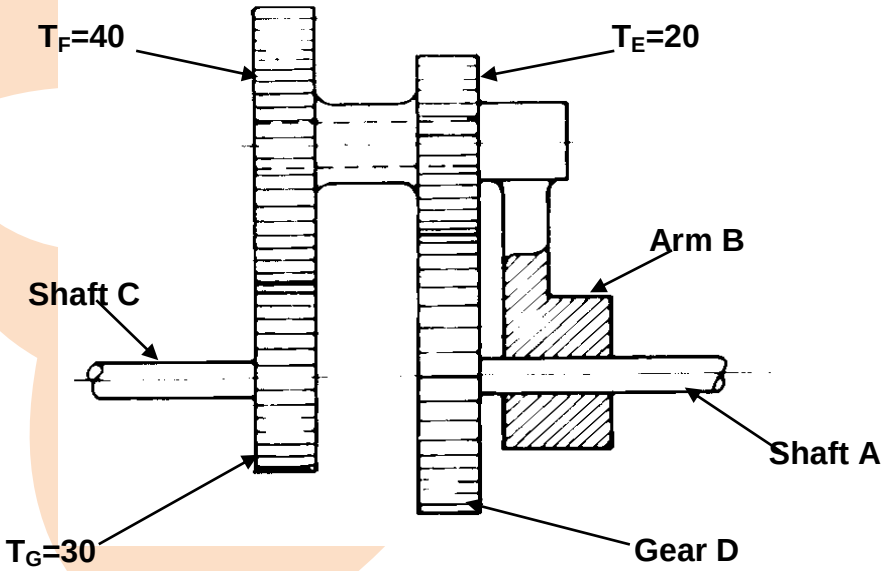

FIGURE 1

6.1 Calculate the speed of shaft C and its direction of rotation. (9)

6.2 Determine the speed and direction of rotation of shaft C if gear wheel D is free and rotating at 100 r/min in the same direction as arm B. (3)

6.3 Determine the breaking torque required to hold the shaft of gear wheel D stationery when all frictional losses are neglected. The gear-train transmits 7,5 kW. (4)

[16]

TOTAL: 100

Copyright reserved

MECHANOTECNICS N5

FORMULA SHEET

1. $m = \frac{PCD}{T}$

2. $DO = m \times (T + 2)$

3. $C = \frac{m}{2} \times (TA + TB)$

4. $Ke = \frac{1}{2} mv^2$

5. $VR = \frac{TA}{TB}$

6. $VR = \frac{PCD\ of\ gear}{PCD\ of\ pinion}$

7. $VR = \frac{NB}{NA}$

8. $NA \times TA = NB \times TB$

9. $Ft = \frac{2 \times T}{PCD}$

10. $Fr = Ft \times Tan\phi$

11. $Fn = Ft \times Sec\phi$

12. $Ie = IA + (VR)^2\ IB + (VR)^2\ IC + (VR)^2\ ID$

13. $T\alpha = Ie \times \alpha A$

14. $T\alpha = TA + \frac{(NB)}{(NA)} \frac{TBC}{\eta 1} + \frac{(ND)}{(NA)} \frac{TD}{\eta 1 \eta 2}$

15. $\frac{NB}{NA} = \frac{\omega B}{\omega A} = \frac{\alpha B}{\alpha A} = \frac{IA}{IB}$

16. $T_{OUTPUT} = T_{INPUT} \times GR \times \eta$

17. $P = \frac{\pi \times PCD}{n}$

18. $Ti + To + Th = 0$

19. $TA = TS + 2TP$

20. $\frac{Input\ speed}{Output\ speed} = \frac{Teeth\ on\ driven\ gears}{Teeth\ on\ driving\ gears}$

21. $v = \pi \times (d + t) \times N$

22. $P = Te \times v$

23. $\frac{T1}{T2} = e^{\mu\theta}$

24. $T1 = \delta \times A$

25. $Tc = m \times v^2$

26. $\frac{T1 - TC}{T2 - TC} = e^{\mu\theta cosec\ \alpha}$

27. $L = \frac{\pi}{2} \times (D + d) + \frac{(D \pm d)^2}{4 \times C} + 2C$

28. $Tg = m \times g \times sin\phi$

29. $v = \omega \times r$

Copyright reserved

30. $v = \sqrt{\mu \times g \times r}$

31. $v = \sqrt{\frac{g \times b \times r}{2 \times h}}$

32. $v = \sqrt{gr\left[\frac{\mu + Tan\,\theta}{1 - \mu Tan\,\theta}\right]}$

33. $v = \sqrt{gr\left[\frac{hTan\theta + b/2}{h - b/2\,tan\,\theta}\right]}$

34. $\frac{T1}{T2} = \left[\frac{1 + \mu Tan\,\theta}{1 - \mu Tan\,\theta}\right]^n$

35. $Cos\,\frac{\theta}{2} = \frac{R - r}{C}$

36. $Cos\,\frac{\phi}{2} = \frac{R + r}{C}$

37. $m = w \times t \times L \times \rho$

38. $T1 = w \times n \times ft$

39. $P = Pg + P\mu$

40. $t = \frac{I \times \omega}{T}$

41. $P = \frac{2 \times \pi \times N \times T}{60}$

42. $T = F \times r$

43. $w = do + 3d - 1{,}5155P$

44. $do = de + 0{,}65P$

45. $w = \frac{\pi \times m}{2}(cos^2\,\theta)$

46. $h = m\left[1 - \frac{\pi}{4}(sin\,\theta\,Cos\theta)\right]$

47. $\frac{p1}{Rho} + \frac{(v1)^2}{2} + gh1 = \frac{p2}{Rho} + \frac{(v2)^2}{2} + gh2$

48. $Vw\,(Va) = \sqrt{\frac{gx^2}{2y}}$

49. $v = C\sqrt{mi}$

50. $hf = \frac{4 \times f \times \ell \times v^2}{2 \times g \times d}$

51. $hf = \frac{f \times \ell \times O^2}{3{,}026 \times d^5}$

52. $Q = \frac{Cd \times A \times a \times \sqrt{(2gh)}}{\sqrt{(A^2 - a^2)}}$

53. $Q = Cd \times A \times \frac{\sqrt{(2gh)}}{\sqrt{(m^2 - 1)}}$

54. $V = \sqrt{(g \times R \times Cos\theta)}$

55. Vol. bucket = $\frac{m \times s}{\rho \times v}$

56. $L = 2C + \pi D$

57. Self-weight = $\frac{m1 \times g \times S^2}{8 \times h}$

Copyright reserved

58. *One load =* $\frac{m2 \times g \times S}{4 \times h}$

59. *T (acc load) = (T1 - T2)R*

60. *T (acc drum) =* $I \times \alpha = mk^2 \times \frac{a}{R}$

61. *P =* ω *× T*

62. $\omega = 2\pi \times N$

63. $Ke = \frac{1}{2} I \times \omega^2$

64. $Ke = \frac{work\ done}{efficiency}$

65. *P = Ke × operations/sec*

66. $(I_1 + I_2)\ \omega_3 = I_1 \omega_1 + I_2 \omega_2$

67. *μ = Tan* θ

68. $\eta = \frac{Tan\,\theta}{Tan\,(\theta + \phi)}$

69. *T = μ × F × Re × n*

70. $T = \frac{\mu \times F \times Re}{\sin\theta}$

71. *T = μ × n × (Fc - S)R*

72. *Fc = m ×* ω^2 *×* γ

73. $Fc = \frac{mv^2}{\gamma}$

74. *Tractive effort = mass on driving wheels × μ × g*

75. *Side thrust =* $FcCos\theta - mg\ Sin\theta$

76. $\mu = \frac{FcCos\theta - mgSin\theta}{mgCos\theta + FcSin\theta}$

77. $P_l = CmgL + mgh$

Copyright reserved