higher education & training

Department:
Higher Education and Training
REPUBLIC OF SOUTH AFRICA

NATIONAL CERTIFICATE:
MULTIDISCIPLINARY DRAWING OFFICE PRACTICE

MECHANICAL AND DRAWING-OFFICE ORIENTATION

(8090184)

11 August 2021 (X-paper)
09:00–12:00

CLOSED-BOOK EXAMINATION

Drawing instruments may be used.

This question paper consists of 6 pages and 1 formula sheet.

257Q1G2111

Copyright reserved

DEPARTMENT OF HIGHER EDUCATION AND TRAINING
REPUBLIC OF SOUTH AFRICA

NATIONAL CERTIFICATE:
MULTIDISCIPLINARY DRAWING OFFICE PRACTICE
MECHANICAL AND DRAWING-OFFICE ORIENTATION
TIME: 3 HOURS
MARKS: 100

INSTRUCTIONS AND INFORMATION

1. Answer all the questions.
2. Read all the questions carefully.
3. Number the answers according to the numbering system used in this question paper.
4. Start each question on a new page.
5. Only use a black or blue pen.
6. Write neatly and legibly.

Copyright reserved

QUESTION 1: DRAWING OFFICE ORIENTATION

1.1 The table below shows the different types of lines used in drawing office practice.

TYPES OF LINES	
A	
B	
C	
D	

1.1.1 Write down the type of line next to the letter (A–D) in your ANSWER BOOK. (4 × 1) (4)

1.1.2 Provide ONE application for each type of line next to the letter (A–D) in your ANSWER BOOK. (4 × 1) (4)

1.2 Make a neat drawing of the symbol used to denote the third-angle orthographic projection. (2)

1.3 By whom was the first distinct definition of orthographic projection formulated in the late seventeen hundreds (1700s)? (2)

[12]

QUESTION 2: DRAWING-OFFICE LAYOUT AND EQUIPMENT

2.1 Write down FIVE important factors that must be recorded when a drawing is issued. (5)

2.2 Explain how the Diazo machine reproduces a drawing. (4)

2.3 Write down the main reason for keeping a record of a drawing. (1)

[10]

QUESTION 3: ENGINEERING MATERIALS AND HEAT TREATMENT AND EQUIPMENT

3.1 Name FIVE advantages of cyanide case hardening. (5)

3.2 Name TWO plastic materials used in the engineering industry. (2)

3.3 Name TWO properties of steel after adding tungsten. (2)

3.4 Name THREE properties of high-speed steel. (3)

3.5 Name THREE uses of high-speed steel. (3)

[15]

Copyright reserved

QUESTION 4: MACHINING

4.1 Name THREE cases where boring has to be carried out. (6)

4.2 What is the reason for using the boring process in the machine shop? (2)

4.3 Explain what is meant by *unilateral tolerance*. (1)

4.4 Explain what is meant by *bilateral tolerance*. (1)

[10]

QUESTION 5: MEASURING INSTRUMENTS

5.1 Name FOUR important factors to consider when choosing or buying a steel ruler. (4)

5.2 Why is the end hook of the measuring tape riveted loosely at the end of the tape? (2)

5.3 FIGURE 1 below shows a vernier scale reading.

Write down the reading on the Vernier.

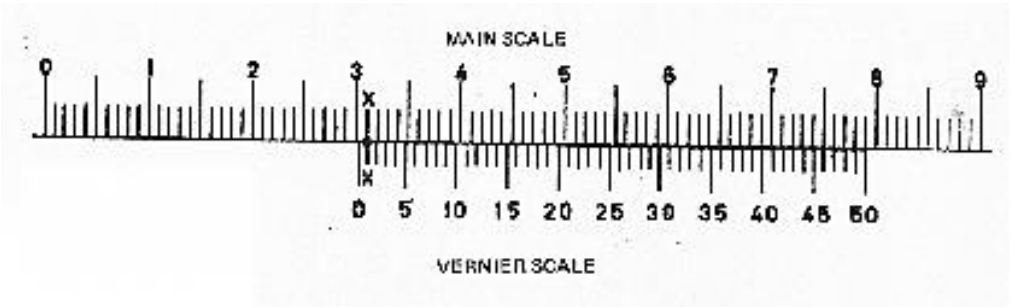

FIGURE 1 (3)

5.4 What is the difference between the graduations of an *external micrometre* and a *depth micrometre*? (1)

[10]

QUESTION 6: KEYS, PULLEYS, CLUTCHES, COUPLINGS AND SCREW THREADS

6.1 Give FOUR reasons for the use of shaft couplings. (4)

6.2 Name the THREE main parts of centrifugal clutches. (3)

6.3 What is the angle of a buttress thread? (1)

6.4 Draw one half of a crowned-rim pulley. (1)

[9]

Copyright reserved

QUESTION 7: BEARINGS AND LUBRICATION

7.1 Study the lubricating device in FIGURE 2 below and answer the questions that follow:

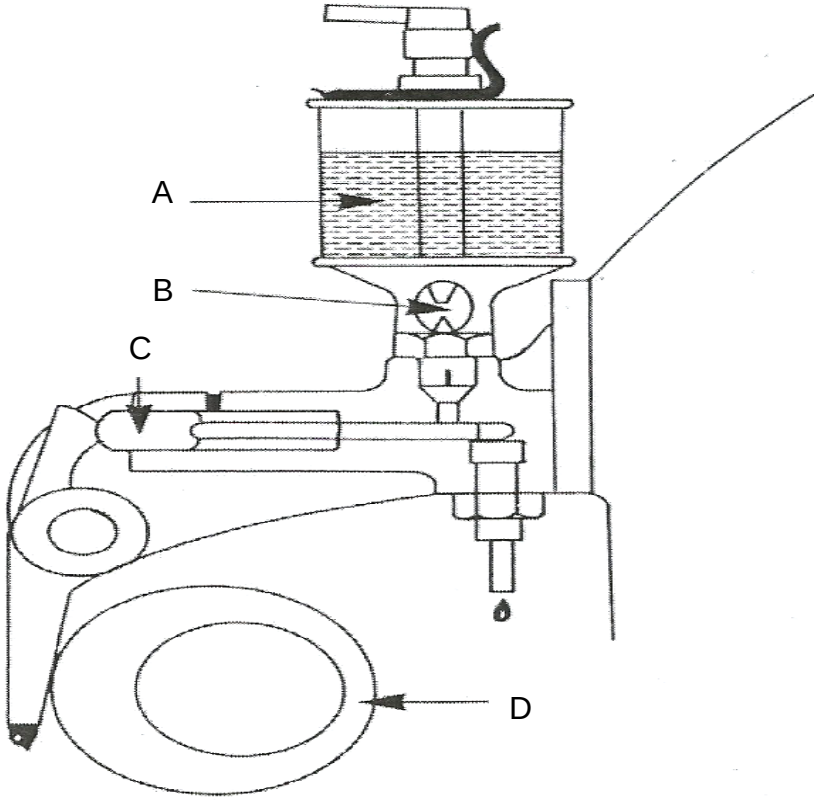

FIGURE 2

7.1.1 Name the lubrication device above. (1)

7.1.2 Name the parts of the device by writing down each label next to the letter (A–D) in your ANSWER BOOK. (4)

7.2 Name THREE types of animal oil. (2)

7.3 Name THREE reasons for lubricating machinery. (3)

[10]

QUESTION 8: GEAR DRIVES

8.1 Name THREE advantages of using the planetary gears system. (3)

8.2 Give TWO advantages of using epicyclical gears. (2)

8.3 Name ONE advantage of a double helical gear. (1)

8.4 Name TWO disadvantages of a double helical gear. (2)

8.5 Name TWO reasons for the use of gear drives. (2)

[10]

QUESTION 9: VALVES, PUMPS AND PIPE FITTINGS

9.1 Name THREE pumps that do NOT require valves. (3)

9.2 Name THREE pumps that require valves. (3)

9.3 FIGURE 3 shows how a static head is obtained. Label the sketch by writing down the answer next to the letter (A–D) in your ANSWER BOOK.

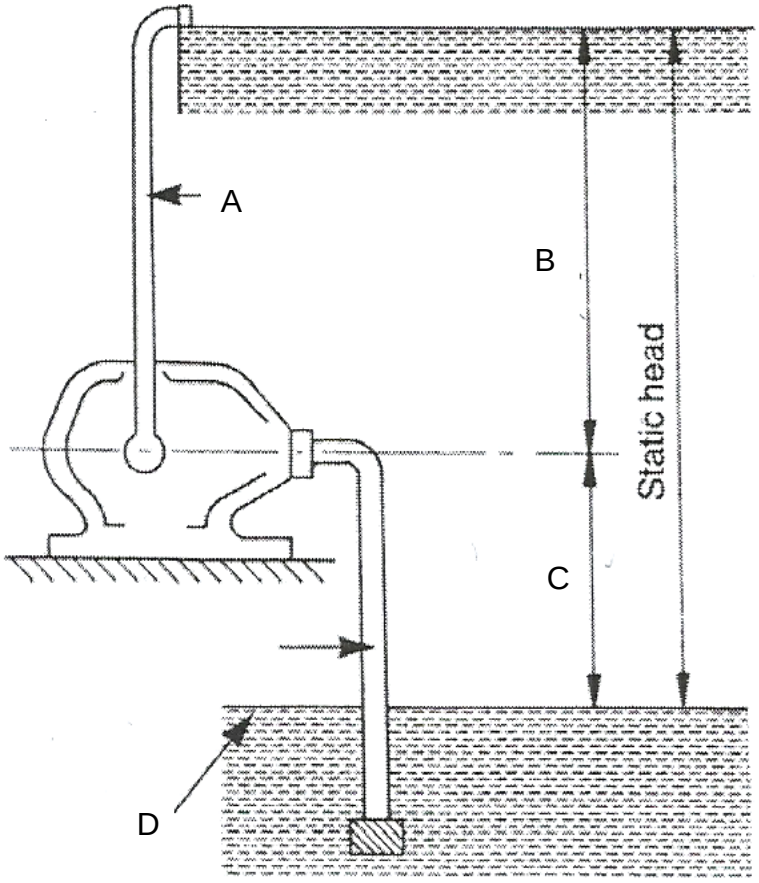

FIGURE 3 (4)

9.4 Name the main reasons for using a volute pump in the industry. (2)

9.5 Name TWO uses of a volute pump in the industry. (2)

[14]

TOTAL: 100

Copyright reserved

FORMULA SHEET

FORMULA FOR INVOLUTE GEAR TEETH

Terminology

T=	Number of teeth
PCD =	Pitch circle diameter
CP =	Circular pitch
M =	Module
T =	Tooth thickness
n =	Number of teeth

Formulae	
To find pitch (p)	$p = \frac{\pi \times PCD}{T}$
To find circular pitch (p)	$p = \pi \times M$
To find module (m)	$m = \frac{PCD}{T}$
To find circular tooth thickness (t)	t = $\frac{p}{2}$
To find addendum	$addendum = m$
To find dedendum	$dedendum = 1{,}25 \times m$
To find fillet radius	$fillet\ radius = 0{,}3 \times m$

Copyright reserved