higher education & training

Department:
Higher Education and Training
REPUBLIC OF SOUTH AFRICA

MARKING GUIDELINE

NATIONAL CERTIFICATE

MECHANICAL AND DRAWING-OFFICE ORIENTATION

2 AUGUST 2018

This marking guideline consists of 7 pages.

Copyright reserved

QUESTION 1: INTRODUCTION

1.1
- Creative communication
- Technical communication
- Marketing communication
- Construction communication (4)

1.2

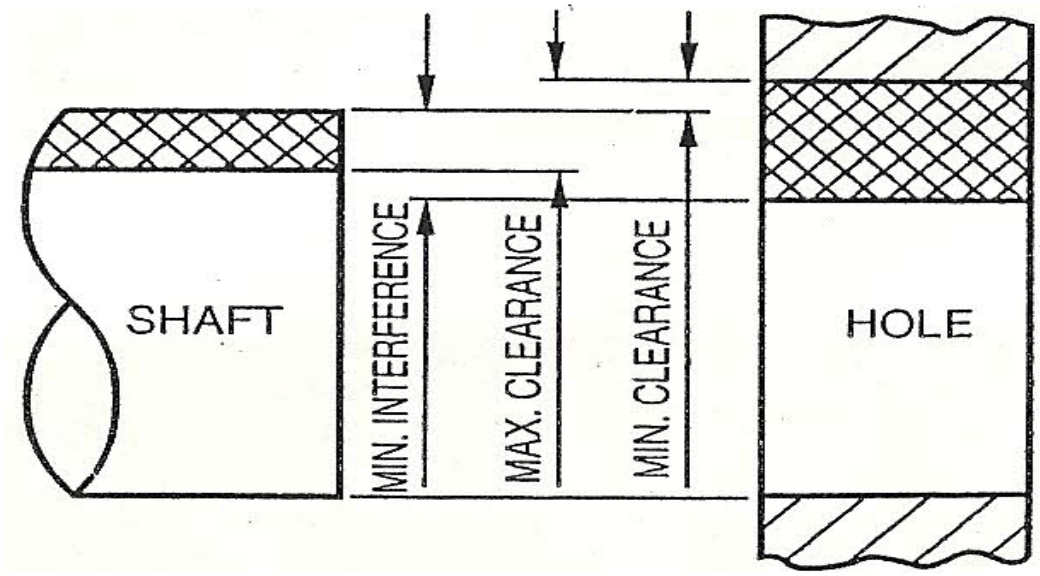

(3 for drawing + 5 for labelling) (8)
[12]

QUESTION 2: DRAWING-OFFICE LAYOUT AND EQUIPMENT

2.1
- Drawing number
- Drawing scale
- Drawing title
- Name or code to identify the draughtsperson
- Date on which the drawing was done
- Revision date
- Client name
- Project title (Any 5 × 1) (5)

2.2
- Drawing number
- Expected return date
- Contact number of the person who has taken the drawing
- Name of the person who issued the drawing
- Issuing date (5)

[10]

QUESTION 3: ENGINEERING MATERIALS AND HEAT TREATMENT

3.1
- Light
- Soft
- Corrosion-resistant
- Highly heat-conductive
- Highly electricity-conductive (5)

3.2

PROPERTIES	USES
• Shock-resistant • Wear-resistant • Heat-resistant • Corrosion-resistant	• Chisels • Files • High-speed drills • Dies • Punches • Gauges

(Any 3 + any 3) (6)

3.3
- Reduced brittleness
- Increased toughness (2)

3.4
- Copper
- Zinc (2)

[15]

QUESTION 4: MACHINING

4.1
4.1.1 True
4.1.2 True
4.1.3 True
4.1.4 True
4.1.5 False

(5 × 1) (5)

4.2 International Organisation for Standardisation (1)

4.3
- Inclined surfaces
- Grooved surfaces
- Slotted surface
- Horizontal surfaces
- Vertical surfaces
- Stepped surfaces
- Flat surfaces (Any 4 × 1) (4)

[10]

QUESTION 5: MEASURING INSTRUMENTS

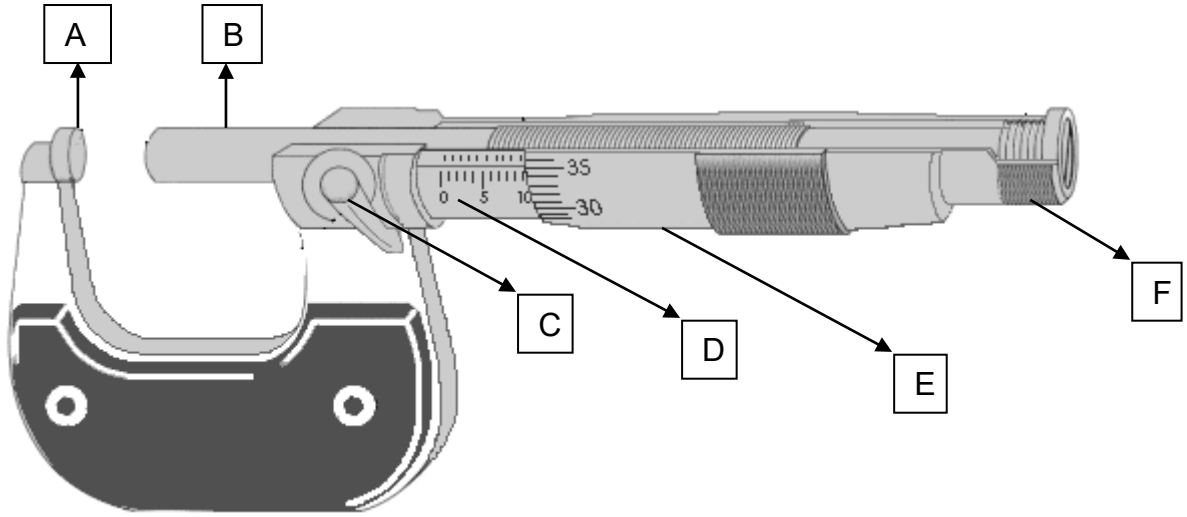

A – Anvil
B – Spindle
C – Lock
D – Barrel
E – Thimble
F – Ratchet **[10]**

QUESTION 6: KEYS, PULLEYS, CLUTCHES, COUPLINGS AND SCREW THREADS

6.1 A plate clutch needs continuous end pressure. (1)

6.2

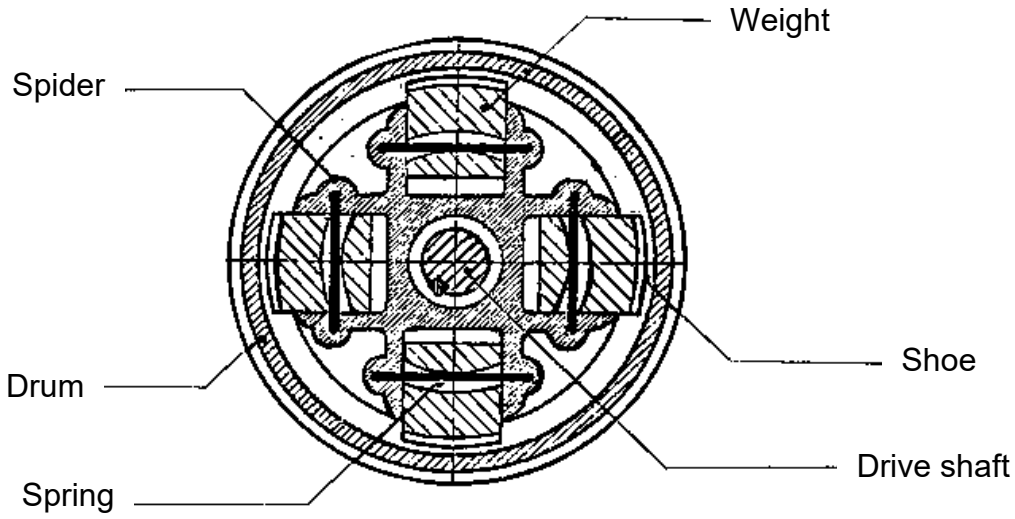

CENTRIFUGAL CLUTCH
(3 for drawing/operation + any 2 labels)

Basic clutch operation:

- As the inner shaft rotates, the slippers (weights) are thrown outwards by centrifugal force.
- The frictional shoe pressure on the inside of the clutch shell (drum) will increase until full speed is reached.
- The force by the shoes on the shell (drum) will make the drum turn with the inner shaft. (8)

[9]

QUESTION 7: BEARINGS AND LUBRICATION

7.1

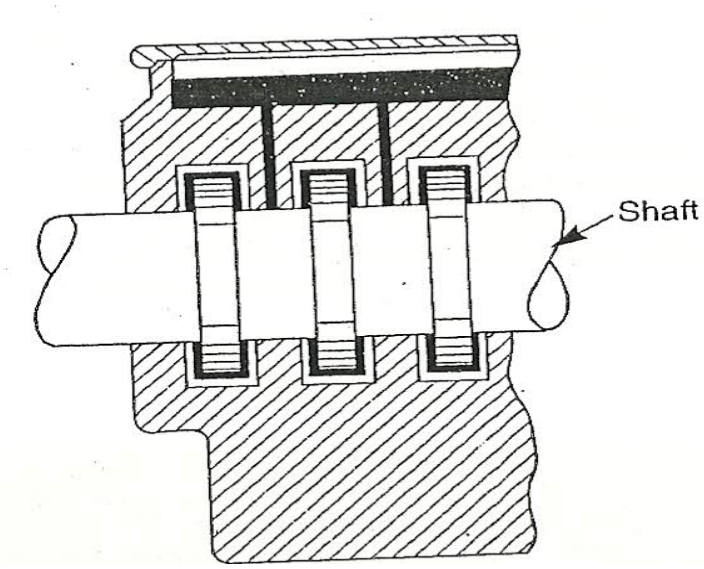

(5)

7.2
- Dirt entering the bearing
- Damaged bearing parts
- Insufficient lubrication (3)

7.3 A full-pressure system lubricates the vital parts of the engine under full pressure from the oil pump. The parts under pressure are the conrod bearings, cam bearings and piston-pin bushing. (2)

[10]

QUESTION 8: GEAR DRIVES

8.1 $P = \pi \times m$

Pitch = 3,141 × 10

= 31,4 use 32 (2)

8.2
- Check for leakages at gearbox seals.
- Check that no grit or dirt enter at the oil sump.
- Make sure the gearbox ventilation is open.
- Use only recommended oils.
- Do routine checks.
- Inspect gear conditions. (Any 4 × 1) (4)

8.3

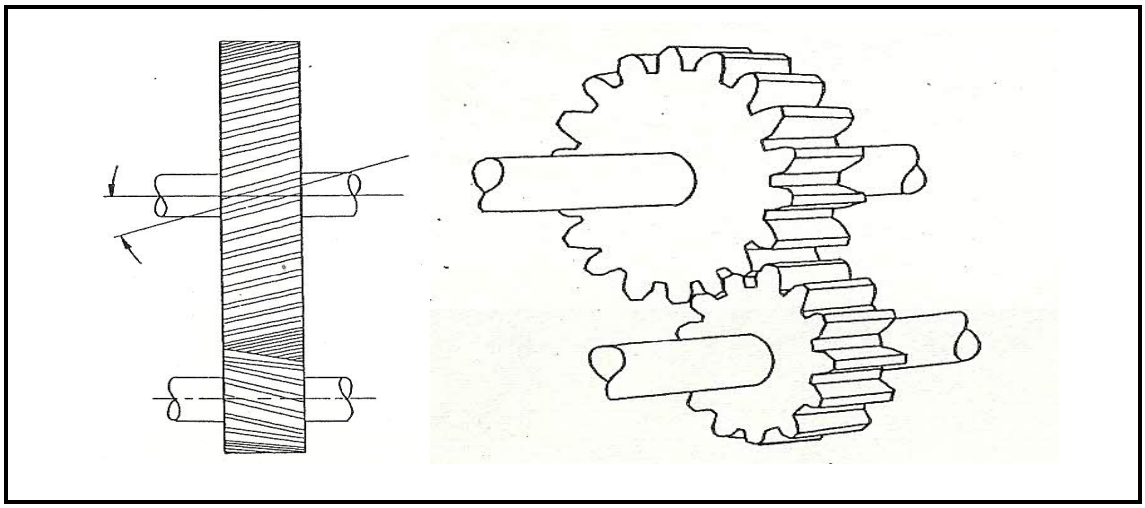

HELICAL GEARS **SPUR GEARS** (2 + 2) (4)
[10]

QUESTION 9: VALVES, PUMPS AND PIPE FITTINGS

9.1

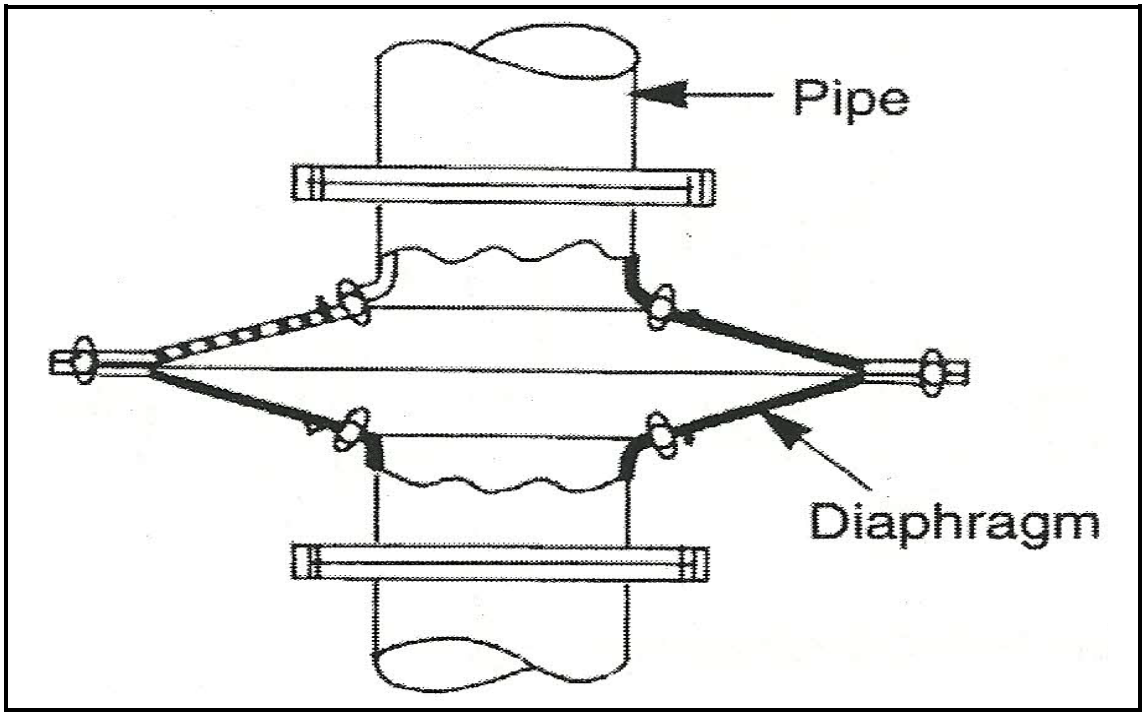

EXPANSION DIAPHRAGM
(2 for drawing + any 2 labels) (4)

9.2 Gear pumps consist of a body with two gears without any valves. The first gear gets rotated via a shaft connected to the motor. The second gear is driven by the first gear. The rotation of the gears will create a partial vacuum so that liquid will be drawn into the pump. The liquid is trapped between the gear teeth and carried round to the opposite side of the pump by both gears before it is forced out by the discharge port. (5)

9.3
- Small floor space required
- Low maintenance cost
- High working speeds
- No sensitive parts
- Small and light foundations are required
- Ability to handle dirty liquids
- Small motor
- Little vibration
- Discharge of liquid without shock
- No air vessels required
- Flow of liquid can be controlled (Any 5 × 1) (5)

[14]

TOTAL: 100

Copyright reserved