higher education & training

Department:
Higher Education and Training
REPUBLIC OF SOUTH AFRICA

MARKING GUIDELINE

NATIONAL CERTIFICATE

MECHANICAL AND DRAWING-OFFICE ORIENTATION N4

20 April 2021

This marking guideline consists of 6 pages.

Copyright reserved

QUESTION 1

1.1
- Creative communication
- Technical communication
- Market communication
- Construction communication (4)

1.2
- Methodical and able to work accurately, neatly, tidily and logically
- Able to communicate verbally and in writing at all levels, from top management to shop floor workers
- Able to use measuring instruments
- Functional knowledge of his/her field
- Able to visualise shapes and sizes in three dimensions (5)

1.3 Gaspard Monge (1)

1.4 Photographing drawing and producing 35 mm negatives to be stored.✓ Occupies less space than full-size drawing, reproduced more easily and better protected from damage.✓ (2)

[12]

QUESTION 2

2.1
2.1.1 Ture
2.1.2 True
2.1.3 False
2.1.4 False
2.1.5 False
2.1.6 True

(6 × 1) (6)

2.2
- Lighting
- Air conditioning and ventilation
- Electrical power requirements
- Space requirements
- Drawing materials (Any 4 × 1) (4)

[10]

QUESTION 3

3.1

PROPERTIES	USES
• Resistant to shock • Wear resistant • Resistant to heat and corrosion	• Chisels • Files • High-speed drills • Dies • Punches • Gauges

(3 × 2) (6)

3.2
- Copper
- Zinc (2 × 2) (4)

3.3 Does not contain iron as base metal OR does not have iron as major ingredient (1)

3.4

THERMOSET	CHARACTERISTICS
• Bakelite • Epoxy resins	• Brittle and good electrical insulator • Strong with excellent bonding characteristics

(2 × 2) (4)
[15]

QUESTION 4

4.1
4.1.1 True
4.1.2 True
4.1.3 True
4.1.4 True
4.1.5 False

(5 × 1) (5)

4.2 Removal of material by means of ordinary spiral drill on drilling machine.✓ Drilled holes can go right through object, or can be a certain depth (blind holes). Work piece clamped to drill table.✓ Drill chuck revolves in direction shown, forced down by gear and rack in drill-press head.✓ Holes not accurate in size or roundness and may also be skew. Drilling normally done on drilling machine or lathe.✓✓

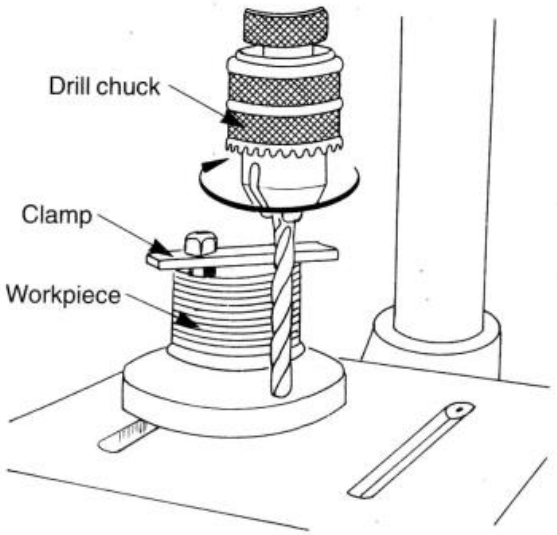

..(5)
[10]

QUESTION 5: MEASURING INSTRUMENTS

5.1 Bilateral tolerance means limits (not necessarily equal) are on each side of basic size✓ while uunilateral tolerance means limits of dimension are only on one side of basic size✓ (2)

5.2
- Tempered stainless steel
- Graduations precision engraved into metal
- Machined on edges
- Satin-chrome finish preventing corrosion
- Two scales – upper one with 1 mm graduations and lower one with 0,5 graduations (Any 4 × 1) (4)

5.3
- Place micrometre in the hole or gap to be measured and gently turn thimble outwards until anvils touch both surfaces
- Gently rock micrometre backwards and forwards to adjust any play in measurement
- Should not be adjusted too tightly or too loosely
- Note reading
- Repeat measurement until constant reading obtained (Any 4 × 1) (4)

[10]

QUESTION 6: KEYS, PULLEYS, CLUTCHES, COUPLINGS AND SCREW THREADS

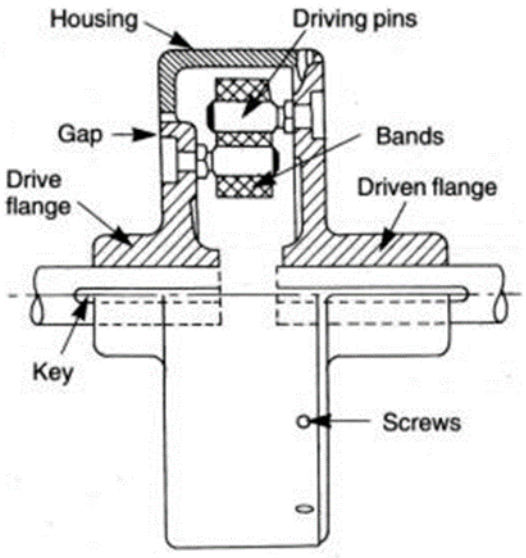

(3 × 1 for drawing and any 6 × 1 for labels) **[9]**

QUESTION 7: BEARINGS AND LUBRICATION

7.1 Sight-feed lubricator allows lubricant to pass through glass tube drop by drop.✓ Oil flow regulated by means of screwed sleeve below feed handle.✓ Handle and needle valve pulled into closed position with screwed sleeve just clear of handle.✓ Flow adjustment made with handle vertical using round knurled nut to lock sleeve in desired position.✓ Filling hole provided in metal cap.✓ Dust kept out by sliding cover.✓ (6)

7.2
- Cold lubricant tends to become thick, moving slowly
- Hot lubricant becomes thin and loses ability to lubricate (4)

[10]

QUESTION 8: GEAR DRIVES

8.1
- Check for oil leakage from gearbox oil seals.
- Ensure that no grit or dirt has entered oil sumps.
- Make sure that ventilation holes of gearboxes are open to keep a steady temperature.
- Use recommended high-quality mineral oils in gearboxes.
- Routine checking and replenishment of oil should be carried out carefully.
- The condition of gear teeth should be inspected periodically and attended to if necessary. (6)

8.2 Internal gears may be used for transmitting motion between parallel shafts.✓ An internal wheel and a pinion rotate in the same direction. Internal gears are useful for the composition of a planetary system of gear drives.✓

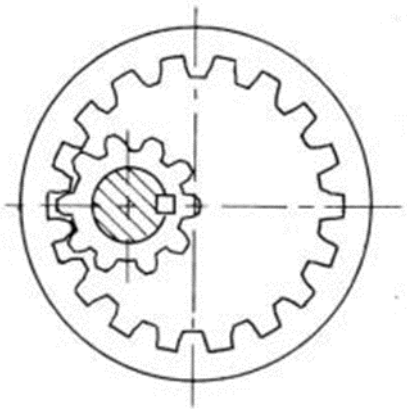

✓ (3)

8.3 m = addendum, T = PCD/m T = 300/6 = 50 teeth✓ (1)

[10]

QUESTION 9: VALVES, PUMPS AND PIPE FITTINGS

9.1
- Profuse and persistent leakage possible
- Often rust up solidly
- Only straight-line movement
- Joints usually blow out to full extent of retaining bolts (4)

9.2
- Small floor space
- Low maintenance cost
- High working speeds
- No sensitive parts
- Small and light foundations
- Ability to handle dirty liquids
- Small motor
- Little vibration
- Discharge of liquid without shock
- No air vessels required
- Controlled flow of liquid (Any 4 × 1) (4)

9.3
- If strainer not completely submerged, air can slip into suction pipe, resulting in air and water being sucked.
- Inefficient foot valve lets water slip back into sump on delivery stroke, resulting in loss of efficiency.
- Loose joints or flanges on suction column let air slip in with water, with consequent inefficient operation.
- Suction valves not opening and closing promptly because of bad seating, poor springs or grit in valves causes water to slip back into sump on delivery stroke.
- Bad internal packing lets water slip into right chamber when plunger is travelling to left and vice versa, resulting in inefficient operation.
- Bad external packing lets water slip out on delivery stroke and air slip in on suction stroke. (6)

[14]

TOTAL: 100

Copyright reserved