higher education & training

Department:
Higher Education and Training
REPUBLIC OF SOUTH AFRICA

MARKING GUIDELINE

NATIONAL CERTIFICATE:
MULTIDISCIPLINARY DRAWING OFFICE PRACTICE

MECHANICAL AND DRAWING-OFFICE ORIENTATION

15 April 2020

This marking guideline consists of 7 pages.

Copyright reserved

QUESTION 1: DRAWING-OFFICE ORIENTATION

1.1
- Full-size scale
- Reduction scale
- Enlargement scale (3)

1.2 1.2.1 Assembly drawings show a number of detail parts or subassemblies✓ joined together to form a specific component or machine.✓

1.2.2 Detail drawings show all information necessary to determine the final form or to purchase a part.✓ The detail drawing must show a complete and exact description of the parts including shapes, dimensions, tolerances, surface finishes and heat treatment either specified or implied.✓

(2 × 2) (4)

1.3

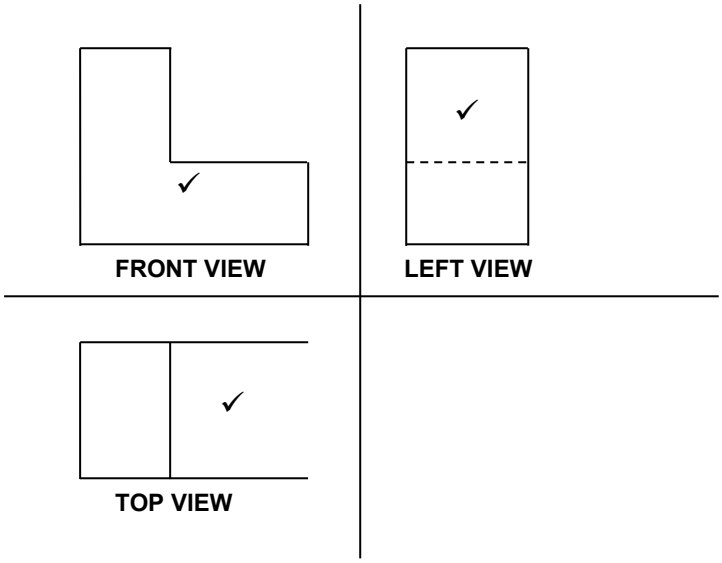

(3)

1.4

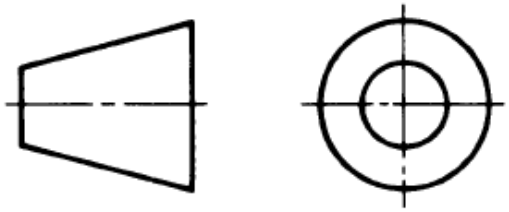

(2)
[12]

QUESTION 2: DRAWING-OFFICE LAYOUT AND EQUIPMENT

2.1 2.1.1 False
2.1.2 False
2.1.3 False
2.1.4 False
2.1.5 False
2.1.6 False

(6 × 1) (6)

2.2
- Clean equipment.
- Check for wear and tear on moving parts.
- Replace oil filters where used.
- Check for cracks or signs of perishing on rubber belts and rollers.
- Replace noisy cooling fans. (Any 4 × 1) (4)

[10]

QUESTION 3: ENGINEERING MATERIALS AND HEAT-TREATMENT EQUIPMENT

3.1 3.1.1 E
3.1.2 F
3.1.3 G
3.1.4 B
3.1.5 A

(5 × 1) (5)

3.2 3.2.1 False – The higher the carbon content in steel, the harder the steel will be.
3.2.2 True
3.2.3 False – The process of coating steel with zinc is known as galvanising.
3.2.4 False – The process of making pig iron includes the smelting of iron ore, coke and flux in a blast furnace.

(4 × 2) (8)

3.3 Annealing involves heating a metal to a specific temperature and then cooling it at a rate that will produce a refined microstructure by either fully or partially separating the constituents. (2)

[15]

QUESTION 4: MACHINING

4.1

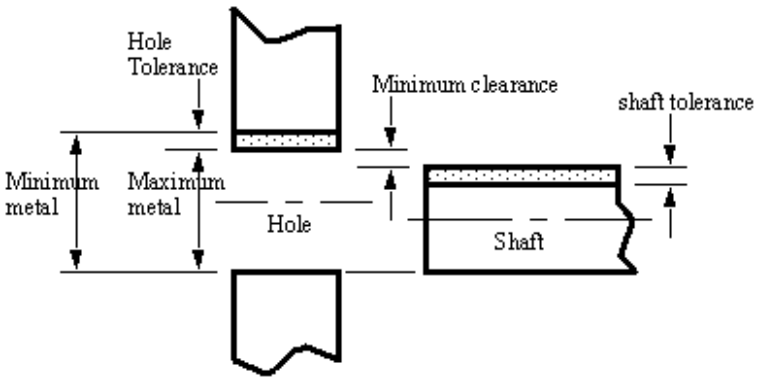

(4)

4.2
- Part size
- Metal shape
- Machining tool
- Quantity

(Any 2 × 1) (2)

4.3

MILLING MACHINE	LATHE MACHINE
A milling machine holds a piece of material still and uses rotary tools to shape the workpiece.✓	A lathe rotates a piece of material and uses nonrotary tools to shape it.✓
Milling machines are capable of creating much more complex geometries.✓	Lathes are best suited for parts that are symmetrical around their origin.✓

(2 + 2) (4)
[10]

QUESTION 5: MEASURING INSTRUMENTS

5.1 A thread-pitch gauge is used to compare the threads on a bolt to the teeth cut on the gauge to assess the pitch of the bolt.✓ The gauge and the workpiece are held up to the light.✓ A piece of white paper can also be held behind the workpiece being tested.✓ The thread pitch is printed or inscribed on each blade of the thread-pitch gauge.✓ (3)

5.2

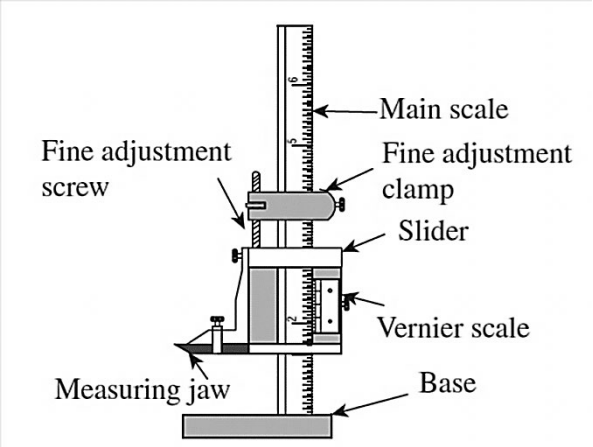

(3 for drawing + 4 for labels) (7)
[10]

QUESTION 6: KEYS, PULLEYS, CLUTCHES, COUPLINGS AND SCREW THREADS

6.1

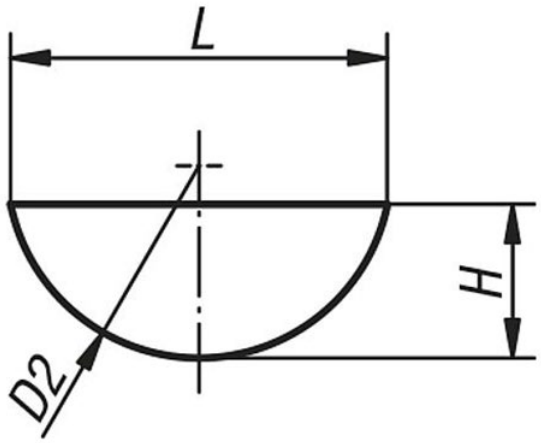

(1)

6.2
- Universal coupling
- Oldham coupling

(2)

6.3
- Glazed frictional surfaces due to constant slipping and overheating: This can be remedied by roughening both contact faces with coarse sandpaper.
- Oil and grease on friction faces: This can be overcome by scraping and removing undesirable matter, leaving the surfaces clean and dry.
- Faulty adjustment of links and levers: The remedy is to check the wear on pins, bushes and make the necessary adjustment on the operating rods.

(Any 2 × 2) (4)

6.4 To obtain various spindle speeds on machinery (1)

6.5 Pitch is the distance measured axially from a point on one screw thread to a corresponding point on an adjacent screw thread. (1)

[9]

QUESTION 7: BEARINGS AND LUBRICATION

7.1
A – Glass oil container
B – Needle vibrating on a shaft
C – Oil
D – Wooden stopper
E – Bearing
F – Needle resting on a shaft

(6 × 1) (6)

7.2 7.2.1 The magnitude of the load is normally the most important factor in determining the size of the bearing.✓ Generally, roller bearings can carry greater loads than ball bearings of the same external dimensions. Ball bearings are mostly used to carry light and medium loads, whilst roller bearings are often the only choice for heavy loads and large diameter shafts.✓

7.2.2 The direction of loads for thrust ball bearings are only suitable for axial loads.✓ Spherical roller thrust bearings, in addition to very heavy axial loads, can also carry a certain amount of simultaneously acting radial load.✓

(2 × 2) (4)
[10]

QUESTION 8: GEAR DRIVES

8.1

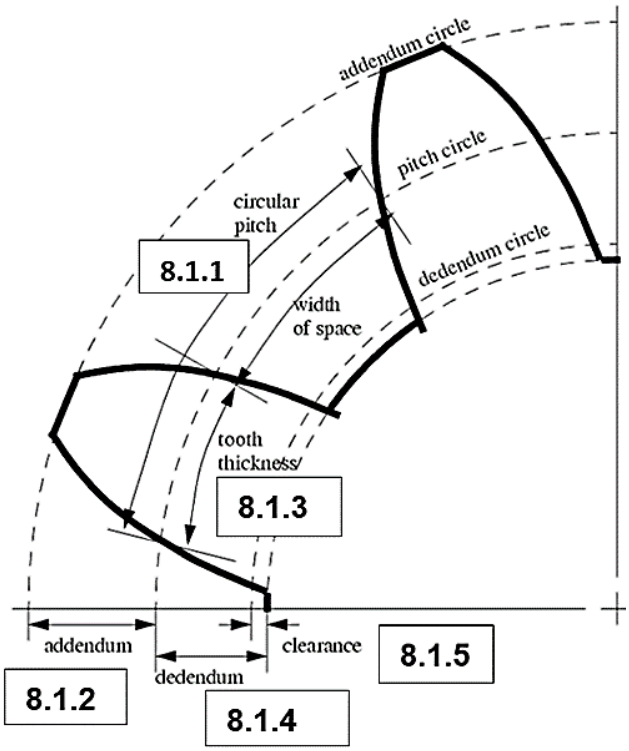

(2 for drawing + 5 for labelling) (7)

8.2 The angle that the pressure of the two faces makes with a line at right angles to the centre line of the two gears,✓ e.g. 20° and 14,5°✓✓ (1 + 2) (3)
[10]

QUESTION 9: VALVES, PUMPS AND PIPE FITTINGS

9.1
- Often rust up solidly
- Only accommodate straight-line movement
- Often leak profusely and persistently
- Expansion joint fatigue (4)

9.2

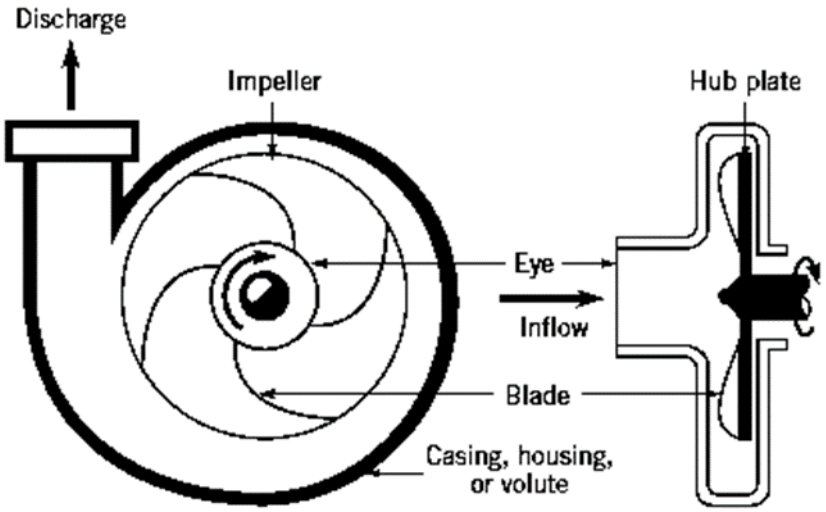

Working principle of a centrifugal pump:

Centrifugal pumps are used to transport fluids by the conversion of rotational kinetic energy to the hydrodynamic energy of the fluid flow.✓ The rotational energy typically comes from an engine or electric motor.✓ The fluid enters the pump impeller along or near the rotating axis and is accelerated by the impeller, flowing radially outward into a diffuser or volute chamber (casing), from where it exits.✓ (5 for drawing + 3 for explanation) (8)

9.3 A rotary control valve is used to control the direction of fluid flow,✓ while a relief valve is installed between the pump and the reservoir to prevent abnormal pressure build-up in the system.✓ (2)

[14]

TOTAL: 100

Copyright reserved