higher education & training

Department:
Higher Education and Training
REPUBLIC OF SOUTH AFRICA

T1050**(E)**(A10)T

NATIONAL CERTIFICATE

MECHANICAL AND DRAWING-OFFICE ORIENTATION N4

(8090184)

10 April 2019 (X-Paper)
09:00–12:00

CLOSED-BOOK EXAMINATION

This question paper consists of 6 pages.

Copyright reserved

DEPARTMENT OF HIGHER EDUCATION AND TRAINING
REPUBLIC OF SOUTH AFRICA

NATIONAL CERTIFICATE
MECHANICAL AND DRAWING-OFFICE ORIENTATION N4
TIME: 3 HOURS
MARKS: 100

INSTRUCTIONS AND INFORMATION

1. Answer ALL the questions.
2. Read ALL the questions carefully.
3. Number the answers according to the numbering system used in this question paper.
4. Sketches must be large, neat and fully labelled.
5. Write neatly and legibly.

Copyright reserved

QUESTION 1: INDUCTION

1.1 What is *computer-aided design*? (3)

1.2 Illustrate the layout of drawings in third-angle orthographic projection. (4)

1.3 List the attributes and characteristics of a good draughtsperson. (5)
[12]

QUESTION 2: DRAWING-OFFICE LAYOUT AND EQUIPMENT

2.1 List the steps of a planned and regular maintenance routine which helps prevent the breakdown of drawing-office equipment. (5)

2.2 Name FIVE important reproduction processes used in the drawing department to reproduce a true copy of a drawing. (5)
[10]

QUESTION 3: ENGINEERING MATERIALS AND HEAT TREATMENT

3.1 State THREE characteristics of each the following materials:

3.1.1 Brass

3.1.2 Tin

3.1.3 Vanadium

(3 × 3) (9)

3.2 Briefly explain the term *nonferrous alloy*. (1)

3.3 State any THREE advantages of the cyanide method. (3)

3.4 State TWO disadvantages of gas carburising. (2)
[15]

Copyright reserved

QUESTION 4: MACHINING

4.1 Indicate whether the following statements are TRUE or FALSE. Choose the answer and write only 'True' or 'False' next to the question number (4.1.1–4.1.5) in the ANSWER BOOK.

4.1.1 Countersinking is the conical enlargement of the mouth of a drilled hole.

4.1.2 Tapping can only be done by hand.

4.1.3 Chamfering is normally done at a slanted (inclined) angle or cut of 90 degrees.

4.1.4 ISO stands for internal organisational standards.

4.1.5 Interference is the difference between the size of the hole and the shaft before assembly.

(5 × 1) (5)

4.2 Make a neat, labelled drawing of the drop forging manufacturing process. (5)
[10]

QUESTION 5: MEASURING INSTRUMENTS

5.1 State THREE common types of micrometers and briefly explain their applications. (6)

5.2 Draw a diagram showing a vernier calliper used to take an internal measurement. (4)
[10]

QUESTION 6: KEYS, PULLEYS, CLUTCHES, COUPLINGS AND SCREW THREADS

6.1 Make a labelled sketch of a raffard coupling. (6)

6.2 List THREE types of keys. (3)
[9]

QUESTION 7: BEARINGS AND LUBRICATION

7.1 Give FIVE reasons for the overheating of a bearing. (5)

7.2 State THREE precautions to keep in mind when choosing the correct lubricant. (3)

7.3 Name TWO types of bearing material. (2)
[10]

Copyright reserved

QUESTION 8: GEAR DRIVES

8.1 List the advantages of gear drives compared to belt, chain or other drives. (4)

8.2 Label the marked components of an epicyclical gear system by writing the answer next to the letter (A–F) in the ANSWER BOOK.

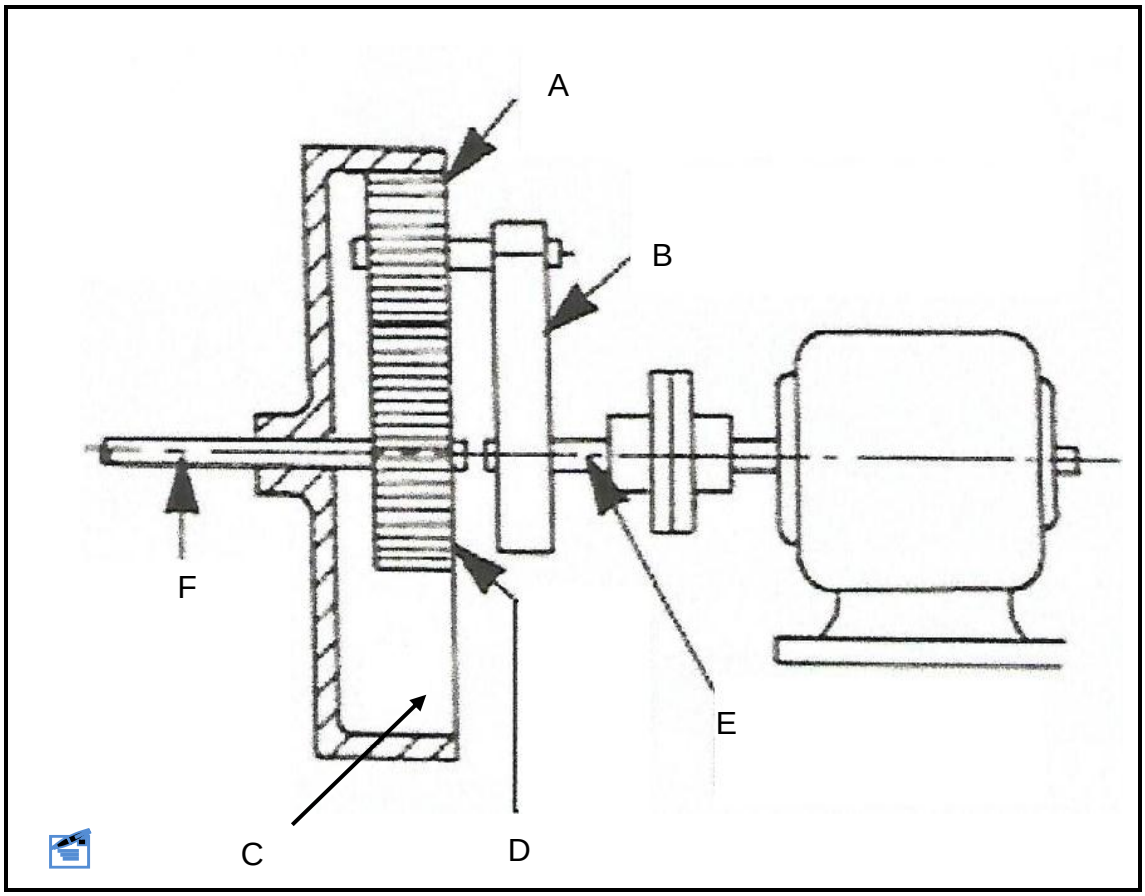

EPICYCLICAL GEAR SYSTEM

(6 × 1) (6)
[10]

QUESTION 9: VALVES, PUMPS AND PIPE FITTINGS

9.1 Briefly explain each of the following terms regarding a pump:

9.1.1	Strainer	(1)
9.1.2	Foot valve	(1)
9.1.3	Slip	(1)
9.1.4	Nonreturn valve	(1)
9.1.5	Static suction head	(2)
9.1.6	Suction lift	(2)
9.1.7	Velocity head	(2)
9.1.8	Friction head	(1)

9.2 State any THREE faults experienced in sliding expansion joints. (3)
[14]

TOTAL: 100

Copyright reserved