higher education & training

Department:
Higher Education and Training
REPUBLIC OF SOUTH AFRICA

MARKING GUIDELINE

NATIONAL CERTIFICATE

MECHANICAL AND DRAWING-OFFICE ORIENTATION N4

9 APRIL 2018

This marking guideline consists of 6 pages.

Copyright reserved

QUESTION 1

1.1 False
1.2 True
1.3 False
1.4 True
1.5 True
1.6 False
1.7 False
1.8 True
1.9 False
1.10 False
1.11 True
1.12 True

(12 × 1) **[12]**

QUESTION 2

2.1 2.1.1 False
2.1.2 False
2.1.3 True
2.1.4 False
2.1.5 True
2.1.6 True

(6 × 1) (6)

2.2
- Natural lighting
- Artificial lighting
- Bright light for drawing boards
- Subdued light for computer rooms (4)

[10]

QUESTION 3

3.1
- Aluminium is light.
- It is soft.
- Aluminium is corrosion-resistant.
- It is highly conductive to heat.
- It is highly conductive to electricity. (5)

3.2 The amount of carbon content (2)

3.3
- Hydrogen
- Oxygen
- Nitrogen
- Chlorine
- Fluorine (5)

Copyright reserved

3.4 Tempering is normally done on steel in a hard, brittle state,✓ by reheating the hardened steel to a temperature of between 200 °C and 450 °C.✓ The steel is then quenched or cooled slowly, since the temperature to which the steel is raised, and not the cooling thereof, brings about the necessary change.✓ (3)
[15]

QUESTION 4

4.1
4.1.1 True
4.1.2 False
4.1.3 True
4.1.4 True
4.1.5 False
(5 × 1) (5)

4.2
- Part size
- Metal shape
- Machining tool
- Quantity (Any 3 × 1) (3)

4.3 A datum line/point is theoretically the exact point/plane from which to work/measure. (1)

4.4 Allowance is the minimum clearance space intended between mating parts. (1)
[10]

QUESTION 5

5.1

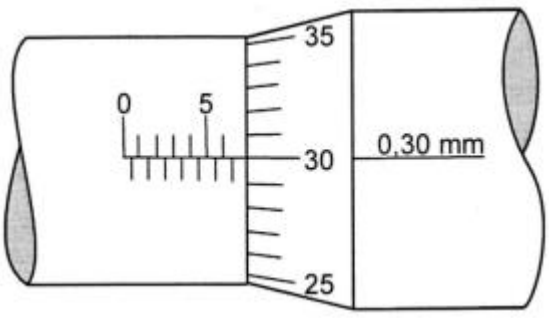

6,00 mm (main scale)
+ 0,50 mm (mark exposed)
+ 0,30 mm (from thimble)
= 6,80 mm
(THREE marks for diagram and THREE marks for steps) (6)

5.2
- External measurements
- Internal measurements
- Step measurements
- Depth measurements (4)

[10]

QUESTION 6

6.1
- Fast, or permanent couplings
- Self-aligning couplings
- Flexible couplings (3)

6.2 Freehand drawing of a square claw-coupling

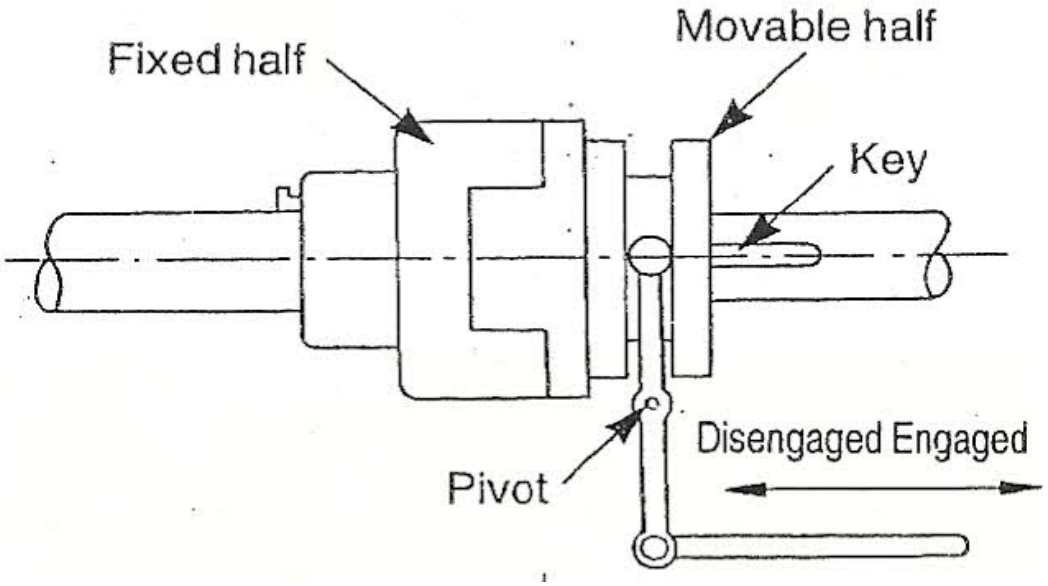

(TWO marks for drawing and TWO marks for labelling) (4)

6.3 Universal coupling (1)

6.4 Width = Diameter/4 W = 120/4 = 30 mm (1)
[9]

QUESTION 7

7.1

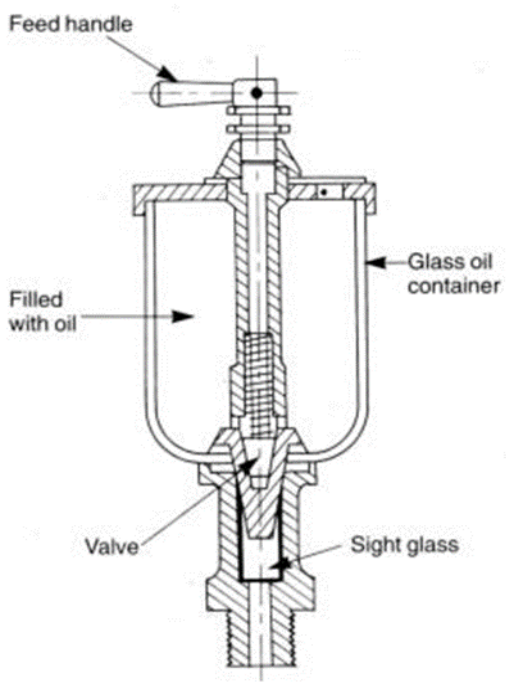

(FIVE marks for labelling and TWO marks for correctness) (7)

7.2
- Radial load
- Thrust load (Axial load)
- Angular load (Combined load) (3)

[10]

QUESTION 8

8.1 Dedendum = 1,25 × m = 1,25 × 6 = 7,5 mm (2)

8.2 8.2.1 It is the height from the pitch circle to the tip of the tooth.

8.2.2 It is the depth from the pitch circle to the root of the tooth.

8.2.3 It is the thickness of the tooth measured along the pitch circle.

8.2.4 Chordal thickness is measured at the pitch circle in a straight line.

8.2.5 It is the play that can be found between the teeth of two gears.
(5 × 1) (5)

8.3 Rack and pinion (1)

8.4 T_n = PCD/M T_n = 100/10 T_n = 10 teeth (2)

[10]

QUESTION 9

9.1

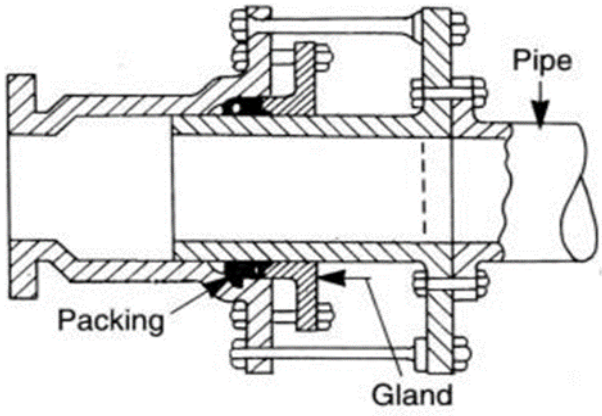

(FOUR marks for labelling and THREE marks for correctness) (7)

9.2
- They often leak profusely and persistently.
- They often rust up solidly.
- They only accommodate straight-line movement. (3)

9.3 These valves are used to control the direction of fluid flow, e.g. four-way rotary valves are frequently used as pilot valves to direct the flow to other valves. The ports or channels in the rotating part of the valve make it possible to control the fluid of various pipelines by a single valve.

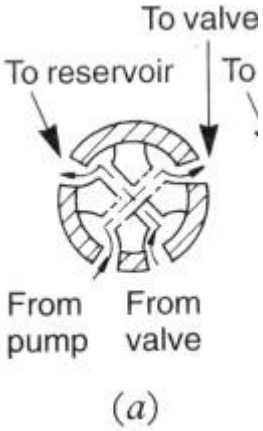

(a)

(4)
[14]

TOTAL: 100

Copyright reserved