higher education & training

Department:
Higher Education and Training
REPUBLIC OF SOUTH AFRICA

NASIENRIGLYN

NASIONALE SERTIFIKAAT

MEGANIESE TEKENE EN ONTWERP N6

8 AUGUSTUS 2019

Hierdie nasienriglyn bestaan uit 13 bladsye.

Kopiereg voorbehou

VRAAG 1

1.1 KRAGTE OP VLIEGWIEL

$$W_{FLYWHEEL} = m \times g$$
$$= 150 \times 9,81$$
$$W_{FLYWHEEL} = 1471,5N \quad (1)$$

KRAGTE OP WAAIERKATROL

$$V_{Pulley} = \frac{\pi \times PCD \times N}{60}$$
$$= \frac{\pi \times 0,48 \times 2100/3}{60}$$
$$= 17,59 \text{ m/s} \quad (1)$$

$$P = (T_1 - T_2)v$$
$$30 \times 10^3 = (T_1 - T_2)\ 17,59$$
$$(T_1 - T_2) = 1705,2 \text{ N} \quad (1)$$

$$\frac{T_1}{T_2} = 4$$
$$T_1 = 4 \times T_2 \quad (1)$$

$$(T_1 - T_2) = 1705,2$$
$$(4T_2 - T_2) = 1705,2$$
$$3T_2 = 1705,2$$
$$T_2 = 568,41N \quad (1)$$

$$T_1 = 4 \times T_2$$
$$= 4 \times 568,41$$
$$T_1 = 2273,6N \quad (1)$$

$$T_1 + T_2 = 2273,6+568,41$$
$$= 2842,1N \quad (1)$$

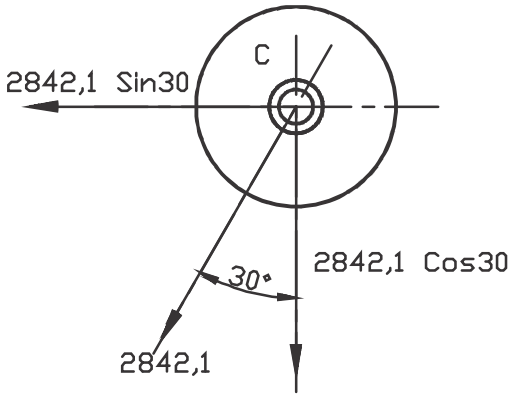

(1)

$$F_H = (T_1 + T_2)\sin 30$$
$$= 2842,1 \times 0,5$$
$$= 1421\text{N} \quad (1)$$

$$F_V = (T_1 + T_2)\text{Cos}30$$
$$= 2842,1 \times 0,866$$
$$= 2461,22\text{N} \quad (1)$$

KRAGTE OP DIE RATTE

$$V_{PINION} = \frac{\pi \times PCD \times N}{60}$$
$$= \frac{\pi \times 0,18 \times 2100}{60}$$
$$= 19,79 \text{ m/s} \quad (1)$$

$$\text{Power} = F_T \times v$$
$$30000 = F_T \times 19,79$$
$$F_T = 1515,8 \text{ N} \quad (1)$$

$$F_R = \text{Tan}20 \times F_T$$
$$= \text{Tan}20 \times 1515,8$$
$$F_R = 551,69 \text{ N} \quad (1)$$

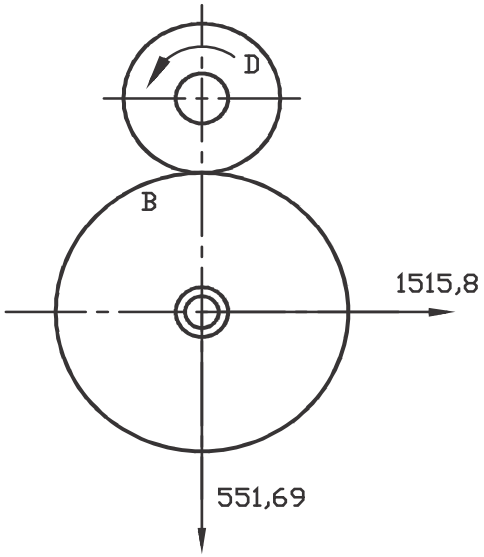

(1)

1.2 BUIGMOMENTE
VERTIKALE REAKSIES

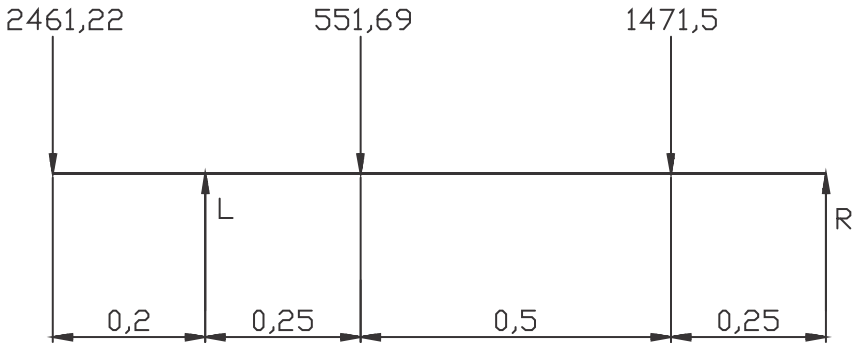

(2)

$$1 \times R_L = 2461,22 \times 1,2 + 551,69 \times 0,75 + 1471,5 \times 0,25$$
$$R_L = 3735,11 \text{ N} \quad (1)$$

$$1 \times R_R + 2461,22 \times 0,2 = 551,69 \times 0,25 + 1471,5 \times 0,75$$
$$R_R = 749,3 \text{ N} \quad (1)$$

Kontrole

$$\uparrow F = \downarrow F$$
$$749,3 + 3735,11 = 2461,22 + 551,69 + 1471,5$$
$$4484,41 = 4484,41 \quad (1)$$

VERTIKALE BUIGMOMENTE

$$BM_L = -2461,22 \times 0,2$$
$$= \text{-492,24 Nm} \quad (1)$$

$$BM_B = 749,3 \times 0,75 - 1471,5 \times 0,5$$
$$= -173,78 \text{ Nm} \quad (1)$$

$$BM_A = 749,3 \times 0,25$$
$$= 187,31 \text{ Nm} \quad (1)$$

HORISONTALE REAKSIES

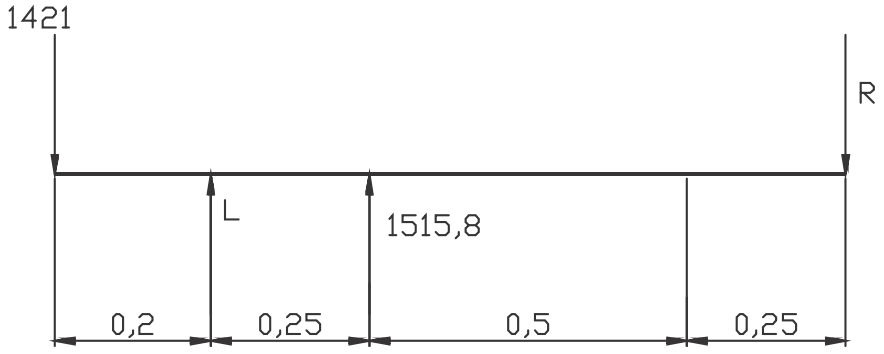

(2)

$$1 \times R_L = 1421 \times 1,2 - 1515,8 \times 0,75$$
$$R_L = 568,35 \text{ N} \quad (1)$$

$$1 \times R_R = 1421 \times 0,2 + 1515,8 \times 0,25$$
$$R_R = 663,15 \text{ N} \quad (1)$$

Kontrole

$$\uparrow F = \downarrow F$$
$$1515,8 + 568,35 = 1421 + 663,15$$
$$2084,15 = 2084,15 \quad (1)$$

HORISONTALE BUIGMOMENTE

$$BM_L = -1421 \times 0,2$$
$$= -284,2 \text{ Nm} \quad (1)$$

$$BM_B = -663,15 \times 0,75$$
$$= -497,36 \text{ Nm} \quad (1)$$

$$BM_A = -663,15 \times 0,25$$
$$= -165,79 \text{ Nm} \quad (1)$$

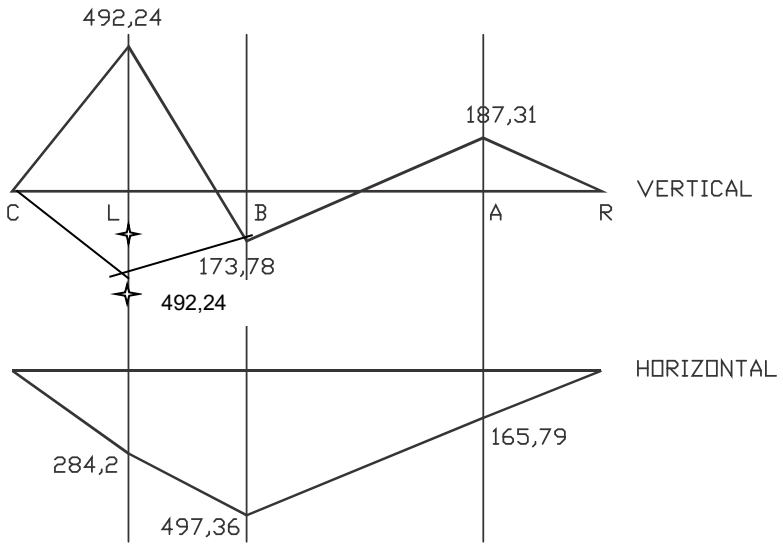

(4)

1.3 MAKSIMUM RESULTERENDE BUIGMOMENTE

$$BM_L = \sqrt{492,24^2 + 284,2^2}$$
$$= 568,4 \text{ Nm}$$

(1)

$$BM_L = \sqrt{497,36^2 + 173,78^2}$$
$$= 526,8 \text{ Nm}$$

GEBRUIK 568,4 Nm (1)

1.4 DRAAIMOMENT OP AS

$$P = \frac{2 \times \pi \times N \times T}{60}$$
$$30 \times 10^3 = \frac{2 \times \pi \times 2100/3 \times T}{60}$$
$$T = 409,26 \text{ Nm}$$

(1)

1.5 ASMIDDELLYNE

$$\begin{aligned} T_E &= \sqrt{M^2 + T^2} \\ &= \sqrt{568,4^2 + 409,26^2} \\ &= 700,41 \text{ Nm} \end{aligned} \quad (1)$$

$$\begin{aligned} T_E &= \pi/16 \times \frac{\left(D^4 - d^4\right)}{D} \times \tau \\ 700,41 &= \pi/16 \times \frac{\left(\left[2d\right]^4 - d^4\right)}{2d} \times 50 \times 10^6 \\ d &= 0,0211 \\ &= 21\text{mm} \\ D &= 42\text{mm} \end{aligned} \quad (1)$$

$$\begin{aligned} M_E &= 0,5\left[M + \sqrt{M^2 + T^2}\right] \\ &= 0,5\left[568,4 + 700,41\right] \\ &= 634,4 \text{ Nm} \end{aligned} \quad (1)$$

$$\begin{aligned} M_E &= \pi/32 \times \frac{\left(D^4 - d^4\right)}{D} \times \sigma \\ 634,4 &= \pi/32 \times \frac{\left(\left[2d\right]^4 - d^4\right)}{2d} \times 60 \times 10^6 \\ d &= 0,0243 \\ &= 24\text{mm} \\ D &= 48\text{mm} \end{aligned} \quad (1)$$

GEBRUIK 48 mm en 24 mm (1)

1.6 RATTANDE

$$\begin{aligned} PCD &= m \times T \\ 180 &= 4 \times T_A \\ T_D &= 45 \\ T_B &= 3 \times T_D \\ T_B &= 135 \end{aligned} \quad (1)$$

1.7 VLAKBREEDTE

$$V = \frac{\pi \times D \times N}{60}$$
$$= \frac{\pi \times 0,18 \times 2100}{60}$$
$$= 19,79 \text{ m/s} \quad (1)$$

$$C_V = \frac{6}{6+V}$$
$$= \frac{6}{6+19,79}$$
$$= 0,23 \quad (1)$$

$$T = F_T \times R$$
$$409,26/3 = F_T \times 0,18/2$$
$$F_T = 1515,78 \text{ N} \quad (1)$$

$$y_D = 0,154 - \left(\frac{0,912}{T}\right)$$
$$= 0,154 - \left(\frac{0,912}{45}\right)$$
$$= 0,134 \quad (1)$$

$$y_B = 0,154 - \left(\frac{0,912}{T}\right)$$
$$= 0,154 - \left(\frac{0,912}{135}\right)$$
$$= 0,147 \quad (1)$$

Om te bepaal watter rat die ontwerp oorheers, met ander woorde, die swakste rat:

$$\begin{aligned} \text{Gear}_D &= \sigma_O \times C_V \times y \\ &= 120\times10^6 \times 0,23 \times 0,134 \\ &= 3,6984\times10^6 \end{aligned} \quad (1)$$

$$\begin{aligned} \text{Gear}_B &= \sigma_O \times C_V \times y \\ &= 110\times10^6 \times 0,23 \times 0,147 \\ &= 3,7197\times10^6 \end{aligned} \quad (1)$$

$$\begin{aligned} b_{MIN} &= 2,5\times\pi\times m \\ &= 2,5\times\pi\times 4 \\ &= 31,4 \text{ mm} \end{aligned} \quad (1)$$

$$\begin{aligned} b_{MAX} &= 4\times\pi\times m \\ &= 4\times\pi\times 4 \\ &= 50,3 \text{ mm} \end{aligned} \quad (1)$$

$$\begin{aligned} F_T &= \pi\times b\times m\times\sigma\times y \\ 1515,8 &= \pi\times 4\times10^{-3}\times b\times 3,6984\times10^6 \\ b &= 32,615 \text{ mm Say } 33 \text{ mm} \end{aligned} \quad (1)$$

1.8 KATROLSPEKE

$$\begin{aligned} PCD_B &= 3\times180 \\ &= 540 \text{ mm} \end{aligned}$$

$$No\ arms = 5\ (from\ tables) \quad (1)$$

$$\begin{aligned} d_{BOSS} &= 2\times d_{SHAFT} \\ &= 2\times48 \\ &= 96 \text{ mm} \end{aligned} \quad (1)$$

$$\begin{aligned} L_{BENDING} &= \frac{PCD}{2} - \frac{d_{BOSS}}{2} \\ &= \frac{540-96}{2} \\ &= 222 \text{ mm} \end{aligned} \quad (1)$$

$$\begin{aligned} M &= \frac{F_T \times L}{arms} \\ &= \frac{1515,8\times0,222}{5} \\ &= 67,3 \text{ Nm} \end{aligned} \quad (1)$$

$$M = \sigma \times Z$$
$$67,3 = 30 \times 10^{6} \times Z$$
$$Z = 2,2434 \times 10^{-6}\ \text{m}^3$$ (1)

$$Z = \frac{\pi}{64} a^3$$
$$2,2434 \times 10^{-6} = \frac{\pi}{64} a^3$$
$$a = 35,7\ mm$$
Sê 36 mm (2)

$$a = 36\ mm$$
$$b = 18\ \text{mm}$$ (1)
[61]

VRAAG 2

2.1
$$Sin\alpha = \frac{R-r}{w}$$
$$Sin\,6 = \frac{125-r}{65}$$
$$r = 118,21 mm$$ (1)

$$R_F = \frac{R+r}{2}$$
$$= \frac{125+118,21}{2}$$
$$= 121,6\,mm$$ (1)

$$Power = \frac{2 \times \pi \times N \times T}{60}$$
$$28 \times 10^{3} = \frac{2 \times \pi \times 1400 \times T}{60}$$
$$= 190,99\,Nm$$ (1)

$$Torque = F_T \times R_F$$
$$190,99 = F_T \times 0,1216$$
$$F_T = 1570,6\,N$$ (1)

$$F_T = \mu \times F_N \quad (1)$$
$$1570,6 = 0,2 \times F_N$$
$$F_N = 7853\,N$$

$$F_N = \frac{F_A}{Sin\alpha}$$
$$7853 = \frac{F_A}{Sin\,6}$$
$$F_A = 820,87\,N \quad (1)$$

2.2
$$F_{ENG} = F_N\left(Sin\alpha + \mu Cos\alpha\right)$$
$$= 7853\left(Sin6 + 0,2Cos6\right)$$
$$= 2382,87\ \text{N} \quad (2)$$

2.3
$$Area = 2 \times \pi \times R_{MEAN} \times width$$
$$= 2 \times \pi \times 0,1216 \times 0,065$$
$$= 0,04966\,m^2 \quad (1)$$

$$P = \frac{F_N}{Area}$$
$$= \frac{7853}{0,04966}$$
$$= 158,128\,kPa \quad (1)$$

2.4
$$\text{Pr}essure_{MAX} = \frac{F_A}{2\pi\left(R-r\right)r}$$
$$= \frac{820,87}{2\pi\left(0,125-0,11821\right)0,11821}$$
$$= 162,768\,kPa \quad (1)$$

2.5
$$\sum M = 0$$
$$F \times 0,21 = 820,87 \times 0,12$$
$$F = 469,1\ \text{N} \quad (1)$$

$$Z = \frac{b \times d^2}{6}$$
$$= \frac{b \times 2^2 \times b^2}{6}$$
$$= {}^{4}\!/_{6}\,b^3 \quad (1)$$

$$M = F \times dis\,\text{tan}\,ce$$
$$= 469,1 \times 0,21$$
$$= 98,5\ \text{Nm} \quad (1)$$

$$M = \sigma \times Z$$
$$98,5 = 30 \times 10^{6} \times Z$$
$$Z = 3,2835 \times 10^{-6}\ \text{m}^3 \quad (1)$$

$$\tfrac{4}{6} \times b^3 = 3,2835 \times 10^{-6}$$
$$b = 17\ \text{mm} \quad (1)$$

$$d = 2 \times 17$$
$$\text{b} = 34\ \text{mm} \quad (1)$$

2.6
$$M = F \times dis\tan ce$$
$$= 2382,87 \times 0,21$$
$$= 500,4\ \text{Nm} \quad (1)$$

$$M = \sigma \times Z$$
$$500,4 = \sigma \times \tfrac{4}{6} \times 0,017^3$$
$$\sigma = 152,78\ \text{MPa} \quad (1)$$

[19]

VRAAG 3

$$F = \frac{\sigma \times A}{1 + \frac{a}{n}\left(\frac{L}{k}\right)^2}$$
$$600 \times 10^3 = \frac{500 \times 10^6 / 8 \times A}{1 + \frac{1}{6400}\left(\frac{4,5}{k}\right)^2}$$
$$1 + \frac{0,003164}{k^2} = 104,17A$$
$$k^2 + 0,003164 = 104,17 \times A \times k^2 \quad (5)$$

$$k^2 = \frac{BD^3 - bd^3}{12(BD - bd)}$$

$$= \frac{B^4 - b^4}{12(B^2 - b^2)} \quad (2)$$

$$= \frac{(B^2 - b^2)(B^2 + b^2)}{12(B^2 - b^2)}$$

$$k^2 = \frac{(B^2 + b^2)}{12}$$

$$A = B^2 - b^2 \quad (1)$$

$$\begin{aligned}
k^2 + 0,003164 &= 104,17 \times A \times k^2 \\
\frac{\left(B^2 + b^2\right)}{12} + 0,003164 &= 104,17 \times \left(B^2 - b^2\right) \times \frac{\left(B^2 + b^2\right)}{12} \\
\left(B^2 + b^2\right) + 0,037968 &= 104,17 \times \left(B^2 - b^2\right) \times \left(B^2 + b^2\right) \\
\left(0,25^2 + b^2\right) + 0,037968 &= 104,17 \times \left(0,25^4 - b^4\right) \\
0,1 + b^2 &= 0,41 - 104,17b^4 \\
104,17b^4 + b^2 - 0,31 &= 0
\end{aligned} \quad (5)$$

Sê $b^2 = x$ (1)

$$\begin{aligned}
&= \frac{-b \pm \sqrt{b^2 - 4ac}}{2a} \\
&= \frac{-1 \pm \sqrt{1^2 - 4(104,17)(-0,31)}}{2(104,17)} \\
&= 0,0499
\end{aligned} \quad (3)$$

$$\begin{aligned}
b^2 &= 0,0499 \\
b &= 223,5\,mm
\end{aligned} \quad (1)$$

$$\begin{aligned}
t &= \frac{250 - 223}{2} \\
b &= 13,5\,mm
\end{aligned} \quad (2)$$

[20]

TOTAAL: 100

Kopiereg voorbehou