higher education & training

Department:
Higher Education and Training
REPUBLIC OF SOUTH AFRICA

NATIONAL CERTIFICATE

MECHANICAL DRAWING AND DESIGN N6

(8090086)

11 August 2021 (X-paper)
09:00–13:00

OPEN-BOOK EXAMINATION

Nonprogrammable calculators may be used.

This question paper consists of 5 pages, tables of 5 pages and an addendum of 3 pages.

259Q1G2111

Copyright reserved

DEPARTMENT OF HIGHER EDUCATION AND TRAINING
REPUBLIC OF SOUTH AFRICA

NATIONAL CERTIFICATE
MECHANICAL DRAWING AND DESIGN N6
TIME: 4 HOURS
MARKS: 100

INSTRUCTIONS AND INFORMATION

1. Answer all the questions.
2. Read all the questions carefully.
3. Number the answers according to the numbering system used in this question paper.
4. Start each question on a new page.
5. Use only blue or black pen.
6. Write neatly and legibly.

Copyright reserved

QUESTION 1

A generator running at 804,469 r/min is driven by an electric motor transmitting 23 kW at 1 440 r/min by means of a wedge belt drive.

The following information is known:

- The approximate centre distance between the driving and driven shaft is 900 mm.
- A centrifugal clutch is used for a soft start.
- The generator should operate for 18 hours per day.
- The suitable belt section is SPB.

Refer to the TABLES (attached) and determine the following to design a suitable wedge belt drive:

1.1	The speed ratio	(2)
1.2	The service factor	(1)
1.3	The design power	(2)
1.4	The minimum pulley diameter	(1)
1.5	The correct centre distance	(1)
1.6	The drive and driven pulleys' pitch diameters	(2)
1.7	The belt length	(1)
1.8	The correctional factor	(1)
1.9	The basic power per belt	(1)
1.10	The additional power per belt	(1)
1.11	The correctional power per belt	(2)
1.12	The number of belts to be used for the drive	(3)
		[18]

Copyright reserved

QUESTION 2

A centrifugal friction clutch has four blocks which slide radially in a spider keyed to the driving shaft. The shaft transmits 12 kW at 800 r/min. The internal drum diameter is 300 mm and the center of gravity of each block is 130 mm from the axis of rotation of the driving shaft. The engagement begins at 65% of the running speed. The coefficient of friction between the lining of the block and the drum is 0,3.

Calculate the following:

2.1	The mass of each block	(8)
2.2	The stiffness of each spring in N/mm, if the new force required after wearing is 642,4 N and each block worn 4 mm, with no adjustment made	(6)
2.3	The percentage torque reduction due to 4 mm wear on each block	(5)
		[19]

Copyright reserved

QUESTION 3

The FIGURE below shows a line shaft shown supported by two bearings, 1 m apart. The shaft is driven by a pinion A with a pitch circle diameter (PCD) of 120 mm and transmits 25 kW at 1 000 r/min clockwise. Gear B is mounted on the line shaft 200 mm from the left-hand bearing and meshes with pinion A 30° from the vertical. The speed reduction ratio of the gears is 4:1. The pressure angle of the gears is 20°. The line shaft is supporting a flywheel with a mass of 400 kg, 500 mm from the left-hand bearing.

The pulley has a mass of 40 kg and a PCD of 300 mm; it overhangs the right-hand bearing by 250 mm and is mounted with a belt that is parallel at 30° from the vertical. The belt tension ratio is 2,8:1. The stresses in the shaft may not exceed 55 MPa for shear or 60 MPa for bending. The shaft is subjected to high shock and fatigue factors of $k_B = 3$ and $k_T = 2,5$.

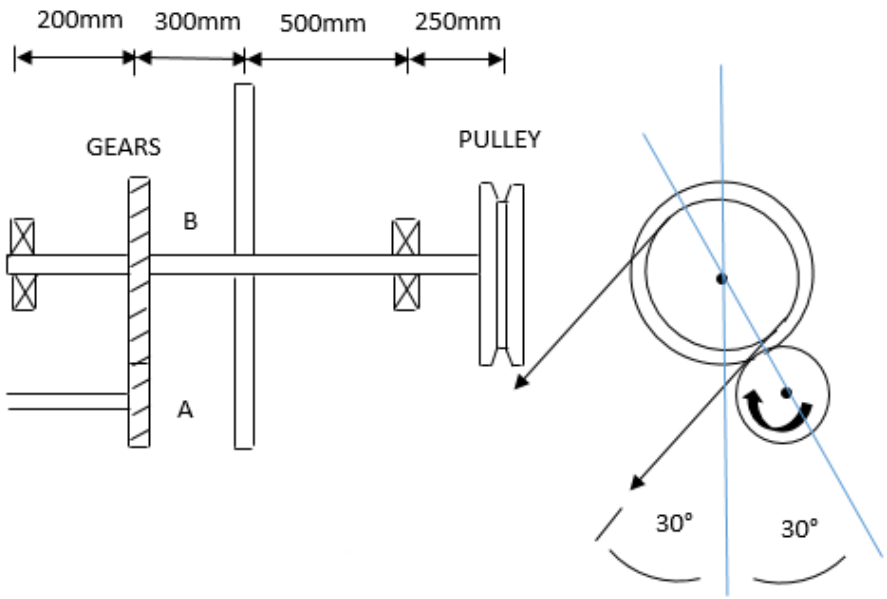

FIGURE

Calculate a suitable line shaft diameter that would withstand both twisting and bending simultaneously. **[48]**

QUESTION 4

A full journal bearing has a diameter of 80 mm and a length of 120 mm. The bearing supports a radial load of 1,8 MN/m^2 of the projected area. A H7g6 fit is used. The surrounding temperature is to be 25 °C and the oil used has a viscosity of 0,098 kg/m.s at its operating temperature. The shaft supported by the bearing is turning at 800 r/min. Assume no heat is dissipated by the surrounds.

Use Mckee's and Lasche's equations, refer to the ADDENDUM (attached) and determine the bearing temperature. **[15]**

TOTAL: 100

Copyright reserved

TABLE

TABLE 1

SERVICE FACTORS FOR THE SELECTION OF WEDGE BELTS

TYPES OF DRIVEN MACHINES	TYPES OF PRIME MOVERS					
	Soft starts			Heavy starts		
	Hours per day duty			Hours per day duty		
	10 and under	over 10 to16	over 16	10 and under	over 10 to 16	over 16
Class 1 - Light duty Blowers and fans Centrifugal compressors and pumps Belt conveyors (uniformly loaded)	1	1.1	1.2	1.1	1.2	1.3
Class 2 - Medium duty Blowers and fans Rotary compressors and pumps Belt conveyors (not uniformly loaded) Generators	1.1	1.2	1.3	1.2	1.3	1.4
Class 3- Heavy duty Brick machinery Compressors and pumps (reciprocating) Conveyors (heavy duty) Hammer mills Punches and presses	1.2	1.3	1.4	1.4	1.5	1.6
Class 4 - Extra heavy duty Crushers Mills	1.3	1.4	1.5	1.5	1.6	1.8

Copyright reserved

TABLE 2

CENTRE DISTANCES FOR 22 N SPB WEDGE BELT DRIVES

Combined arc and belt length / Correction factor					0.8			0.85			0.9				1.05		
Speed ratio	Pitch diameter of pulleys		Power per belt kW		BELT LENGTH												
	Driver	Driven	960 r/min	1440 r/min	1260	1340	1410	1590	1800	1900	2020	2150	2280	2400	4560	4820	5070
1.69	236	400	11.94	16.56	_	_	_	_	392	443	504	570	635	696	1779	1909	2034
1.75	160	280	6.45	8.92	278	319	355	446	551	602	662	727	792	852	_	_	_
1.75	180	315	7.92	11.00	_	273	309	401	507	557	618	683	748	809	_	_	_
1.78	200	355	9.38	13.03	_	_	_	351	458	508	569	635	700	760	1843	1973	2098
1.79	140	250	4.95	6.80	319	360	395	486	591	641	702	767	832	892	_	_	_
1.79	224	400	11.10	15.41	_	_	_	_	400	452	513	578	644	705	1788	1918	2043

Copyright reserved

Please turn over

TABLE 3

MINIMUM PULLEY DIAMETER (mm)

Speed of faster Shaft r/min	Minimum pulley diameter (mm)																					
	Design power (kW)																					
	Up to 1	3,0	4,0	5,0	7,5	10	15	20	25	30	40	50	60	75	90	110	130					
500	67	90	100	112	125	140	180	200	212	236	250	280	280	315	375	400	450					
600	67	85	90	100	112	125	140	180	200	212	224	250	265	280	300	335	475					
720	67	80	85	90	90	106	132	150	160	170	200	236	250	265	280	300	335					
960	67	75	80	85	95	100	112	132	150	180	180	200	224	250	280	280	300					
1200	67	71	80	80	95	95	106	118	132	150	160	180	200	236	236	250	265					
1440	67	67	75	80	85	85	100	112	125	140	160	170	190	212	236	250	280					
1800	67	67	71	75	80	85	95	106	112	125	150	160	170	190	224	236	265					
2800	67	67	67	67	80	80	85	90	100	112	125	140	160	170	180	212	224					

Copyright reserved

TABLE 4

POWER RATING FOR 16 N SPB WEDGE BELT DRIVE

r/min shaft	Rated power (kW) per belt for small pulley pitch diameter(mm)									Belt (m/s)
	140	**150**	**160**	**170**	**180**	**190**	**200**	**212**	**224**	
800	3.67	4.31	4.95	5.58	6.20	6.83	7.45	8.18	8.91	10
900	4.03	4.74	5.44	6.14	6.84	7.53	8.21	9.03	9.84	
960	**4.23**	**4.99**	**5.73**	**6.47**	**7.21**	**7.94**	**8.66**	**9.52**	**10.38**	
1000	4.37	5.15	5.92	6.69	7.45	8.21	8.96	9.85	10.73	
1100	4.70	5.55	6.39	7.22	8.05	8.87	9.68	10.64	11.60	
1200	5.02	5.93	6.83	7.73	8.62	9.50	10.38	11.41	12.44	20
1300	5.32	6.30	7.27	8.23	9.81	10.12	11.05	12.15	13.24	
1400	5.61	6.66	7.69	8.71	9.72	10.71	11.70	12.87	14.02	
1440	**5.73**	**6.80**	**7.85**	**8.89**	**9.93**	**10.95**	**11.95**	**13.15**	**14.37**	
1500	5.90	7.00	8.09	9.17	10.24	11.29	12.33	13.56	14.76	

Copyright reserved

TABLE 5

POWER INCREMENT FOR SPB 16 N WEDGE BELT DRIVE

r/min of faster shaft	Additional power (kw) per belt for speed ratio							
	1.02 to 1.05	1.06 to 1.11	1.12 to 1.18	1.19 to 1.26	1.27 to 1.38	1.39 to 1.52	1.58 to 1.94	1.95 to 3.38
960	**0.07**	**0.19**	**0.32**	**0.44**	**0.54**	**0.62**	**0.70**	**0.77**
1000	0.07	0.19	0.34	0.46	0.56	0.66	0.74	0.81
1100	0.08	0.22	0.37	0.51	0.62	0.72	0.81	0.89
1200	0.09	0.23	0.41	0.56	0.68	0.79	0.89	0.97
1300	0.09	0.25	0.44	0.60	0.73	0.86	0.96	1.05
1400	0.10	0.28	0.48	0.65	0.79	0.93	1.04	1.13
1440	**0.10**	**0.28**	**0.48**	**0.66**	**0.79**	**0.94**	**1.06**	**1.15**
1500	0.10	0.29	0.51	0.69	0.84	0.99	1.11	1.21

Copyright reserved

ADDENDUM

LIMITS OF TOLERANCE FOR SELECTED HOLES *LIMIETE VAN TOLERANSIE VIR GEKOSE GATE*									
ES = Upper deviation/*boonste afwwyking* EI = Lower deviation/*onderste afwyking*								Unit/*eenheid* = 0,001 mm	
Nominal sizes *Nominale groottes*		H7		H8		H9		H11	
Over/ *Bo* mm	Up to and including/ *Tot by* mm	ES +	EI	ES +	EI	ES +	EI	ES +	EI
0	3	10	0	14	0	25	0	60	0
3	6	12	0	18	0	30	0	75	0
6	10	15	0	22	0	36	0	90	0
10	18	18	0	27	0	43	0	110	0
18	30	21	0	33	0	52	0	130	0
30	50	25	0	39	0	62	0	160	0
50	80	30	0	46	0	74	0	190	0
80	120	35	0	54	0	87	0	220	0
120	180	40	0	63	0	100	0	250	0
180	250	46	0	72	0	115	0	290	0
250	315	52	0	81	0	130	0	320	0
315	400	57	0	89	0	140	0	360	0
400	500	63	0	97	0	155	0	400	0

Copyright reserved

LIMITS OF TOLERANCE FOR SELECTED SHAFTS
LIMIETE VAN TOLERANSIE VIR GEKOSE ASTE

es = Upper deviation/*boonste afwwyking*
ei = Lower deviation/*onderste afwyking* **Unit/*eenheid* = 0,001 mm**

Nominal sizes/ ***Nominale groottes***		**c11**		**d10**		**e9**		**f7**		**g6**		**h6**	
Over/ ***Bo*** mm	**To/** ***Tot by*** mm	es -	ei -	es -	ej -	es -	ei -	es -	ei -	es -	ei -	es -	ei -
-	3	60	120	20	60	14	39	6	16	2	8	0	6
3	6	70	145	30	78	20	50	10	22	4	12	0	8
6	10	80	170	40	98	25	61	13	28	5	14	0	9
10	18	95	205	50	120	32	75	16	34	6	17	0	11
18	30	110	240	65	149	40	92	20	41	7	20	0	13
30	40	120	280	80	180	50	112	25	50	9	25	0	16
40	50	130	290	80	180	50	112	25	50	9	25	0	16
50	65	140	330	100	220	60	134	30	60	10	29	0	19
65	80	150	340	100	220	60	134	30	60	10	29	0	19
80	100	170	390	120	260	72	159	36	71	12	34	0	22
100	120	180	400	120	260	72	159	36	71	12	34	0	22
120	140	200	450	145	305	85	185	43	83	14	39	0	25
140	160	210	460	145	305	85	185	43	83	14	39	0	25
160	180	230	480	145	305	85	185	43	83	14	39	0	25
180	200	240	530	170	355	100	215	50	96	15	44	0	29
200	225	260	550	170	355	100	215	50	96	15	44	0	29
225	250	280	570	170	355	100	215	50	96	15	44	0	29
250	280	300	620	190	400	110	240	56	108	17	49	0	32
280	315	330	650	190	400	110	240	56	108	17	49	0	32
315	355	360	720	210	440	125	265	62	119	18	54	0	36
355	400	400	760	210	440	125	265	62	119	18	54	0	36
400	450	440	840	230	480	135	290	68	131	20	60	0	40
450	500	480	880	230	480	135	290	68	131	20	60	0	40

Copyright reserved

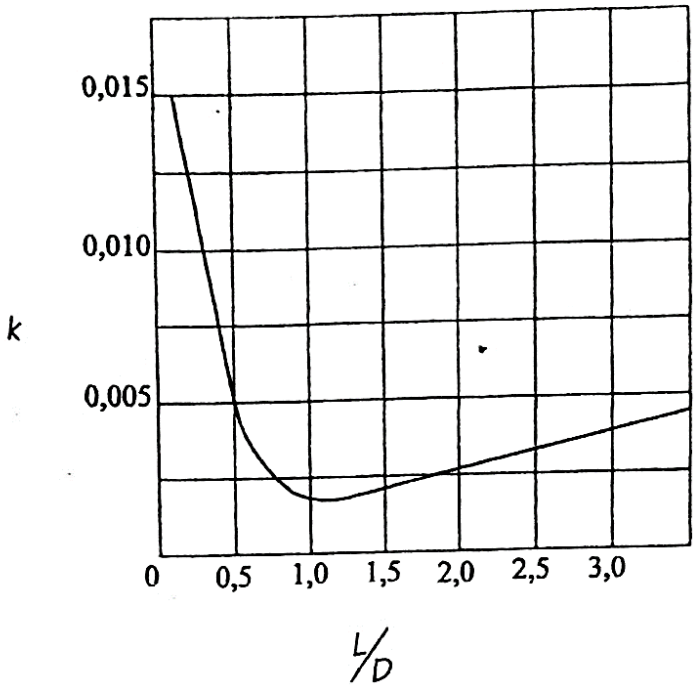

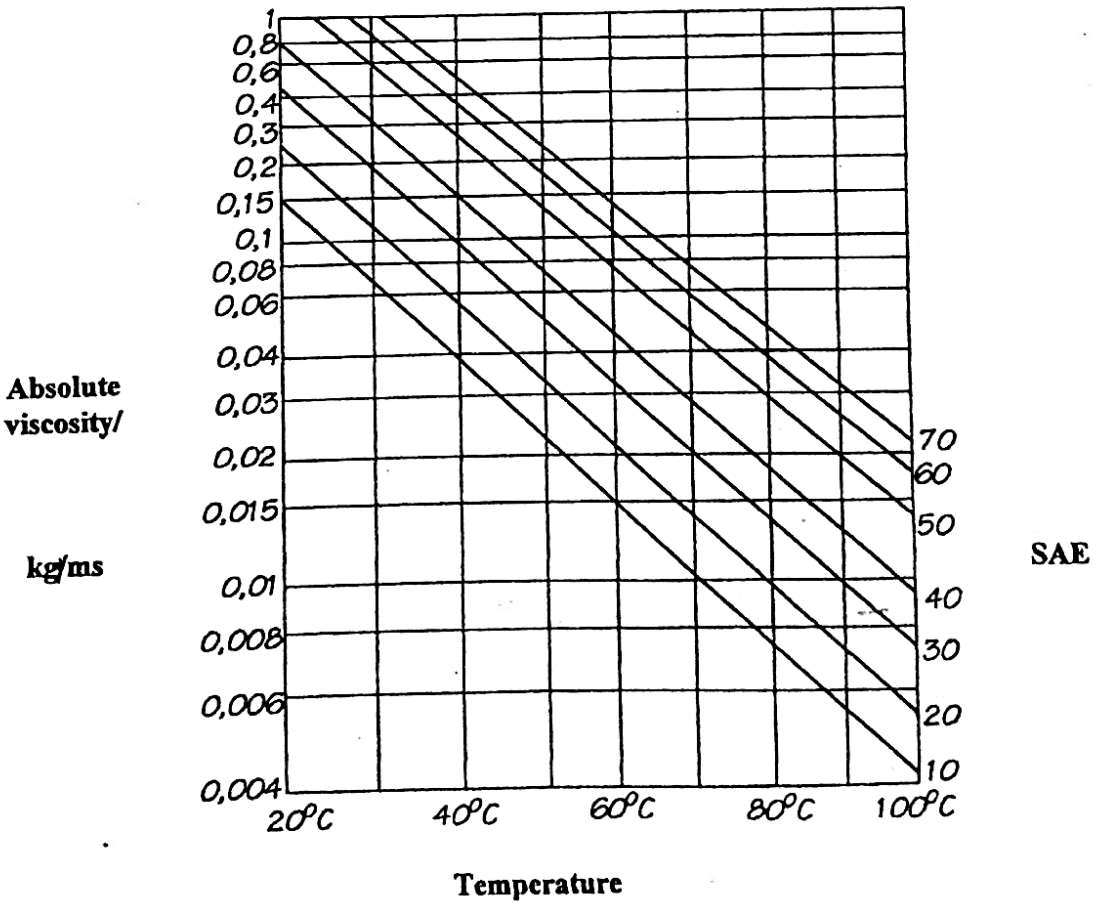

Copyright reserved