higher education & training

Department:
Higher Education and Training
REPUBLIC OF SOUTH AFRICA

MARKING GUIDELINE

NATIONAL CERTIFICATE

MECHANICAL DRAWING AND DESIGN N5

25 JULY 2019

This marking guideline consists of 11 pages.

Copyright reserved

QUESTION 1

1.1 STANDARD WELD SYMBOL

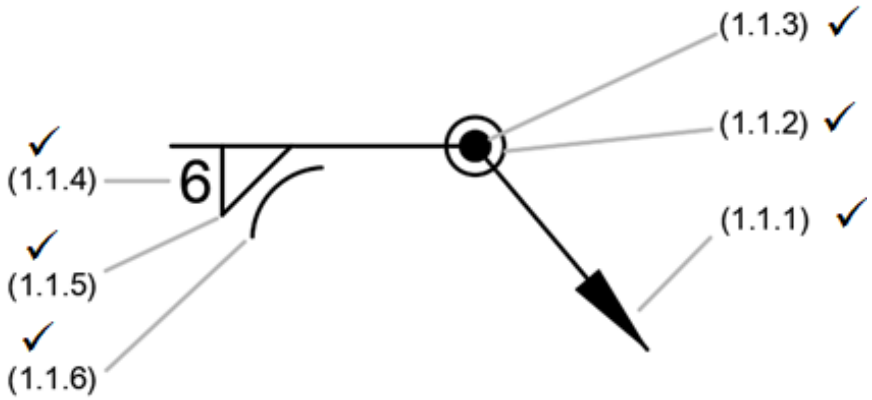

(6)

1.2 $tan\theta = \frac{10}{20}$

$tan\theta = 0{,}5$

$\theta = 26{,}6^{o}$✓✓

$Sin26{,}6^{o} = \frac{throat}{20}$

$Throat = Sin26{,}6^{o} \times 20$

$Throat = 8{,}95\ mm$

The throat can be said to be 9 mm.✓✓ (4)

[10]

QUESTION 2

2.1 Diameter of rivets

$d = 6\sqrt{t}$
$= 6 \times \sqrt{12}$
$= 6 \times 3{,}464\ mm$
$= 20{,}784\ mm$

Use 20 mm standard size rivets.✓✓ (2)

Ultimate stresses:

$\sigma_t = 480\ Mpa$
$\tau = 384\ Mpa$
$\sigma_c = 618\ Mpa$

Working stresses:

$$Allowable\ stress = \frac{Ultimate\ stress}{Factor\ of\ safety}$$

$\sigma_t = \frac{480 \times 10^6 N/m^2}{6} 80\ MPa$✓

$\tau = \frac{384 \times 10^6 N/m^2}{6} = 64\ MPa$✓

$\sigma_c = \frac{618 \times 10^6 N/m^2}{6} = 103\ MPa$✓ (3)

Pitch
Consider one pitch length of the joint.

For the best pitch:
Strength of plate in tension = strength of rivets in shear

$$\sigma_t \times (p - d) \times t \times \frac{\pi d^2}{4}$$

Use either ultimate or working stresses.

$$480 \times 10^6 N/m^2 \times (p - 0{,}02\ m) \times 0{,}012\ m = 384 \times 10^6\ N/m^2 \times \frac{\pi \times (0{,}02\ m)^2}{4}$$

$$p - 0{,}02\ m = \frac{120\ 637{,}2\ N}{480 \times 10^6\ N/m^2 \times 0{,}012}$$

$p = 0{,}012\ m + 0{,}02\ m$
$= 0{,}041\ m$
$Pitch = 41\ mm$✓✓

Check that this is above the allowable minimum
$Minimum\ pitch = 2 \times d$
$= 2 \times 20\ mm$
$= 40\ mm$✓✓ (4)

2.2 Failing loads per pitch length
Ultimate stresses must be used.

Plate in tension
Ultimate tensile load = Ultimate tensile stress x cross-sectional area of plate at rivet hole

$$P = \sigma_t \times (p - d) \times t$$
$$= 480 \times 10^6\ N/m^2 \times (0{,}041\ m - 0{,}02\ m) \times 0{,}012\ m$$
$$= 120{,}96\ kN$$ ✓✓ (2)

Rivet in shear
Ultimate shear load = Ultimate shear stress x cross-sectional area of rivet

$$P = \tau \times \frac{\pi d^2}{4}$$
$$= 384 \times 10^6\ N/m^2 \times \frac{(0{,}02\ m)^2}{4}$$
$$= 120{,}64\ kN$$ ✓✓ (2)

Crushing of rivets against the plate
Ultimate crushing load = Ultimate crushing stress x projected area of contact

$$P = \sigma_c \times d \times t$$
$$= 618 \times 10^6\ N/m^2 \times 0{,}02 \times 0{,}012$$
$$= 148{,}32\ kN$$ ✓✓ (2)

2.3 Failing load is therefore 120,6 kN and the joint would fail by shearing at the rivets.✓ (1)
[16]

QUESTION 3

$$Allowable\ tensile\ stress\ in\ the\ belt = \frac{Allowable\ force\ in\ the\ belt}{Cross-sectional\ area\ of\ the\ belt}$$

$$Allowable\ force\ in\ the\ belt = Allowable\ tensile\ strength\ in\ the\ belt$$

$= 1{,}38 \times 10^6\ N/m^2 \times 0{,}1\ m \times 0{,}01\ m$
$= 1\ 380\ N$✓
This is the pull on the tight side T_1✓ (2)

`$T_1 = 2{,}2\ T_2$

$\therefore T_2 = \frac{T_1}{2{,}2}$

$= \frac{1\ 380}{2{,}2}$

$= 6{,}273\ N$✓✓ (2)

$Power\ transmitted = \frac{(T_1 - T_2) \times \pi\ (D + t)N}{60}$

$= \frac{(1380-627{,}3)\times\pi(0{,}25+0{,}01)800}{60}$

$= 8197{,}6\ watts$
$= 8{,}1976\ W$✓✓ (2)
[6]

QUESTION 4

4.1 DATA:

$F = 90\ kN;\ d = d_1 = 40\ mm;\ d_2 = 80\ mm;\ t = 30\ mm;\ t_1 = 15\ mm;\ SF = 5$

4.1.1 For ultimate tensile stress, consider rod:

$F = \frac{1}{4}\pi d_1^2 \sigma_t$

$\therefore \sigma_t = \frac{4F}{\pi d_1^2} = \frac{4(90\times10^3)}{\pi(0{,}04)^2} = \ 71{,}6197 \times 5 = 358{,}09\ MPa$✓

Consider eye:

$F = (d_2 - d_1)t\sigma_t$

$\therefore \sigma_t = \frac{F}{(d_2-d_1)t} = \frac{(90\times10^3)}{(0{,}08-0{,}04)(0{,}03)} = 75{,}000 \times 5 = 375{,}000\ MPa$✓

Ultimate tensile stress = 375 MPa✓✓ (4)

4.1.2 For ultimate shear stress, consider pin:

$$F = 2(\frac{1}{4}\pi d^2)\tau$$

$$\therefore \tau = \frac{4F}{2\pi d_1^2} = \frac{4(90\times10^3)}{2\pi(0{,}04)^2} = 35{,}81 \times 5 = 179{,}05\ MPa\checkmark\checkmark$$ (2)

4.1.3 For ultimate compressive stress, consider eye:

$$F = d_1 t \sigma_c$$

$$\therefore \sigma_c = \frac{F}{d_1 t} = \frac{(90\times10^3)}{(0{,}04)(0{,}03)} = 75{,}00 \times 5 = 375\ MPa\checkmark\checkmark$$ (2)

4.2 THREE VIES OF KNUCKLE JOINT

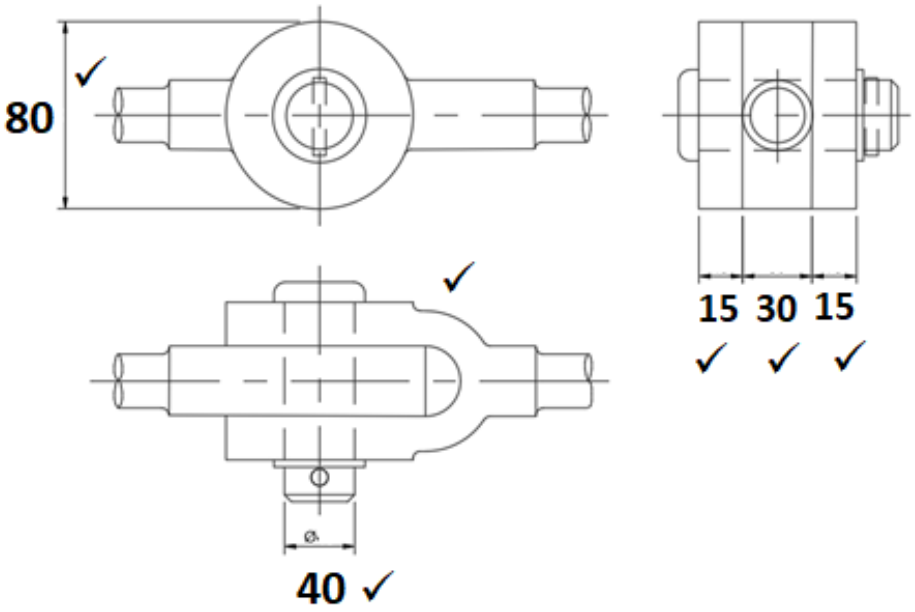

(6)

4.3 PURPOSE
Used to join two parts or rods, where one may have a small angular or axial movement about the other.

APPLICATIONS
- Machinery: valve mechanisms, reciprocating engines✓
- Structures: suspension chains, bridges, roof trusses, braced girders✓
- Joints of gearing✓ and elevator chains✓ (4)

[18]

QUESTION 5

5.1 Maximum load on piston rod = Area of piston × steam pressure

$$P = \frac{\pi D^2}{4} \times p$$

$$= \pi \times \frac{(0{,}762m)^2}{4} \times 1{,}03 \times 10^6 N/m^2$$

$$= 469{,}72\ kN$$ ✓✓ (2)

For the rod load = Area of rod x stress in rod

$$P = \frac{\pi d^2}{4} \times \sigma$$

$$d = \sqrt{\frac{P \times 4}{\pi \times \sigma}}$$

$$= \sqrt{\frac{469{,}72 \times 10^3 N \times 4}{\pi \times 27{,}5 \times 10^6}}$$

$$d = 0{,}1476\ m$$

Say d = 148 mm✓✓ (2)

5.2 A taper of 1 in 4 on diameter means the diameter decreases 1 mm for each 4 mm in length.
Therefore, in 152 mm length the diameter decreases:

$$1 \times \frac{152}{4} = 38\ mm$$

Diameter at end of taper = $152 - 38 = 114\ mm$✓✓ (2)

Threaded portion

$$Nominal\ diameter\ of\ bolt = Core\ diameter + 1{,}227 \times pitch$$

$$Core\ diameter = Nominal\ diameter - 1{,}227 \times pitch$$

Assume a pitch of 6 mm

$$d_r = 102 - 1{,}227 \times 6$$

$$= 94{,}638\ mm$$

Say 95 mm✓✓ (2)

$$Tensile\ stress\ in\ threaded\ portion = \frac{load}{area}$$

$$\sigma_t = \frac{P}{\frac{\pi {d_r}^2}{4}}$$

$$\sigma_t = \frac{469{,}72 \times 10^3 N \times 4}{\pi \times (0{,}095m)^6}$$

$$= 66{,}27\ MPa$$ ✓✓ (2)

[10]

QUESTION 6

6.1 The diameter of the shaft

$$Power = \frac{2\pi NT}{60}$$

$$\therefore T = \frac{Power \times 60}{2\times\pi\times N}$$

$$= \frac{80\times10^3\times60}{2\times\pi\times290\ r/min}\checkmark$$

$$= 2\ 634\ Nm\checkmark\checkmark \quad (3)$$

$$T = \frac{\pi {d_s}^3}{16} \times \tau$$

$$\therefore {d_s}^3 = \frac{T\times16}{\pi\times\tau}$$

$$= \frac{2631\ Nm\times16}{\pi\times62\times10^6 N/m^2}$$

$$= \sqrt[3]{0{,}0002162\ m^2}$$

$$= 0{,}06\ m\checkmark$$

$$= 60\ mm\checkmark\checkmark \quad (3)$$

6.2 The length of the claws

$$D^2 - d^2 = \frac{\pi {d_s}^3\times\tau_{shaft}}{2\times n\times l\times\sigma_{c_{claws}}}$$

$$l = \frac{\pi {d_s}^3\times\tau_{shaft}}{2\times n\times\sigma_{c_{claws}}\times(D^2-d^2)}$$

$$= \frac{\pi\times(0{,}06m)^3\times62\times10^6 N/m^2}{2\times3\times12\times10^6 N/m^2\times[(0{,}16m)^2-(0{,}08m)^2]}\checkmark$$

$$= 0{,}0304\checkmark$$

Say length = 31 mm✓✓ (4)

[10]

QUESTION 7

7.1 Thickness of cylinder walls = $\frac{P_i \times D}{20{,}6 \times 10^6 N/m^2} + 0{,}008\ m$

$= \frac{1{,}24 \times 10^6 N/m^2 \times 0{,}45\ m}{20{,}6 \times 10^6 N/m^2} + 0{,}008\ m$

$= 0{,}035\ m$✓
$t = 35\ mm$✓✓ (3)

7.2 Thickness of the flanges $= 1{,}2\ t\ to\ 1{,}5\ t$
$= 1{,}2 \times 35\ mm\ to\ 1{,}5 \times 35\ mm$
$A = 42\ mm\ to\ 52{,}5\ mm$
Say 45 mm✓✓ (2)

7.3 Thickness of cylinder cover $= t + 10\ mm$
$= 35\ mm + 10\ mm$
$= 42\ mm$✓✓ (2)

7.4 Allowable load per stud = Core area of stud x allowable tensile stress
$= 144 \times 10^{-6} m^2 \times \frac{464 \times 10^6}{8}$

$= 8\ 352\ newtons$✓

$8\ 352\ newtons = \frac{197{,}21 \times 10^3 newtons}{N}$

$N = \frac{197{,}21 \times 10^3 newtons}{8352\ newtons}$

$N = 26{,}6$

Say 27 studs✓

$PCD = D + 2t + d$

$= 450\ mm + (2 \times 35\ mm) + 16\ mm$
$= 536\ mm$✓

$Pitch = \frac{Circumference\ of\ pitch\ circle}{Number\ of\ studs}$

$= \frac{\pi \times 536\ mm}{27}$

$= 62{,}37\ mm$✓

Pitch to be approximately
$4 \times d$
$= 4 \times 16\ mm$
$= 64\ mm$✓✓ (6)

7.5 Width

$= 3 \times d$

$= 3 \times 16\ mm$

$= 48\ mm$✓✓ (2)

[15]

QUESTION 8

8.1 $d_r = d_s - 2h$

$= 0{,}058\ m - 0{,}0055\ m$

$= 0{,}047\ m$

$A = \frac{1}{2}(0{,}058\ m - 0{,}047\ m) \times 10 \times 0{,}045\ m$

$= 2{,}475 \times 10^{-3}\ m^2$

$r_m = \frac{d_s + d_r}{4}$

$= \frac{0{,}058\ m - 0{,}047\ m}{4}$

$= 0{,}02625\ m$✓

$T = p \times A \times r_m$

$= 5 \times 10^6 N/m^2 \times 2{,}475 \times 10^{-3} m^2 \times 0{,}0265\ m$

$= 324{,}8\ Nm$✓✓ (3)

$Power = \frac{2\pi TN}{60}$

$= \frac{2 \times \pi \times 324{,}8 \times 2\ 500}{60}$

$Power = 85{,}03\ kW$✓✓ (2)

8.2 $Force\ on\ splines = p \times A$

$= 5 \times 10^6\ N/m^2 \times 2{,}475 \times 10^{-3} m^2$

$= 12\ 375\ N$✓

$Sliding\ force = force\ on\ splines \times friction\ coefficient$

$= 12\ 375 \times 0{,}1$

$= 1\ 237{,}5\ N$✓ (2)

[7]

QUESTION 9

$Friction\ force = \mu \times Q$
$= 0{,}06 \times 60 \times 10^3$✓✓

$Distance\ moved = \pi \times d \times N$
$= \pi \times 0{,}15 \times 60$✓✓

$Work\ absorbed = \pi \times Q \times \pi \times d \times N$
$= 0{,}06 \times 60 \times 10^3 N \times \pi \times 0{,}15\ m \times 60\ r/min$
$= 101{,}8 \times 10^3 Nm/min$✓✓

$Power\ absorbed\ by\ friction = \frac{101\ 800}{60}$

$= 1{,}7 \times 10^3\ W$
$= 1{,}7\ kW$✓✓

(4 × 2) **[8]**

TOTAL: 100

Copyright reserved