higher education & training

Department:
Higher Education and Training
REPUBLIC OF SOUTH AFRICA

NATIONAL CERTIFICATE

MECHANICAL DRAUGHTING N4

(8090204)

23 July 2021 (X-paper)
09:00–13:00

REQUIREMENTS: **ONE A2 drawing sheet for instrumental drawings**
ONE A3 and ONE A4 drawing sheet for computer drawings

Drawing instruments and nonprogrammable calculators may be used.

This question paper consists of 5 pages and 3 diagram sheets.

013Q1G2123

Copyright reserved

DEPARTMENT OF HIGHER EDUCATION AND TRAINING
REPUBLIC OF SOUTH AFRICA

NATIONAL CERTIFICATE
MECHANICAL DRAUGHTING N4
TIME: 4 HOURS
MARKS: 100

INSTRUCTIONS AND INFORMATION

1. Answer all the questions.
2. Read all the questions carefully before attempting to answer them.
3. Number the answers according to the numbering system used in this question paper.
4. Candidates using pencil must use BOTH sides of the A2 drawing sheet.
5. Print all the candidate information in the title block.
6. Use your own discretion for dimensions not given.
7. Use a 3 mm fillet radius for all radii not given.
8. All drawing work must comply with the SANS 0111-1990 CODE OF PRACTICE.
9. Work neatly.

Copyright reserved

QUESTION 1: CONVENTIONAL REPRESENTATION

FIGURE 3, DIAGRAM SHEET 3 (attached) shows components of a G clamp used for clamping purposes.

As a draughtsperson, you have been summoned to draw a detail drawing of the right handed SQUARE THREAD SCREW (Item 2) in the conventional method.

Use the following data:

- Pitch: 8 mm
- Nominal diameter: 24 mm
- Direction: Right hand

Do the drawing to scale 1:1 and in a vertical position.

Show hidden detail in the top and bottom section of the screw. **[10]**

QUESTION 2: CAM PROFILES

A cam profile which will impart motion to a knife edge follower is required.

Draw the full profile of a disc-cam to scale 1:1.

Use the following CAM DATA:

- Minimum diameter: 44 mm
- Stroke height (lift/fall): 30 mm
- Shaft diameter: 20 mm
- Performance:
  - Dwells for the first 75° of cam rotation.
  - Rises for the next 90° of cam rotation according to simple harmonic motion.
  - Dwells for the next 30°.
  - Falls 30 mm for the next 90° according to uniform acceleration and retardation of cam rotation.
  - Dwells for the last 75° of cam rotation.
  - Rotation of cam is anti-clockwise.

NOTE: Show the displacement diagram and all construction lines. Draw the displacement diagram on the left-hand side of the cam profile. Do not draw the follower. Show hatching detail for the 20-mm diameter shaft. **[15]**

Copyright reserved

QUESTION 3: SECTIONAL DRAWING

FIGURE 1, DIAGRAM SHEET 1 (attached) shows two views of a sliding support for a machine.

Draw the following views of the casting to scale 1:1 and in first-angle orthographic projection:

3.1 A full sectional front view on cutting plane X-X (9)

3.2 A full sectional left view on cutting plane Y-Y (7)

Show only the following dimensions and symbols on the drawing:

At A: The surface to be machined with a surface texture of 12 µm (2)

At B The 12-mm diameter hole with an upper deviation of +15 µm and a lower deviation of -13 µm (2)

NOTE: No dashed lines are required.

[20]

QUESTION 4: DETAIL DRAWING

FIGURE 2, DIAGRAM SHEET 2 (attached) shows two views of a step-down pulley consisting of the following parts:

- Item 1 – Carrier
- Item 2 – Pulley
- Item 3 – Bolt
- Item 4 – Bush
- Item 5 – Hexagon nut
- Item 6 – Washer

Draw detail drawings of the following components to scale 1:1 and in third-angle orthographic projection:

4.1 The carrier (Item 1), showing:

4.1.1 A full sectional front view (9)

4.1.2 A full sectional right view

Show the dashed lines of the web detail in this view. (6)

4.2 The pulley (Item 2), showing a half sectional front view with the top half in section

NOTE: Show dashed lines in the half not sectioned. (5)

[20]

Copyright reserved

QUESTION 5: ASSEMBLY DRAWING

FIGURE 3, DIAGRAM SHEET 3 (attached) shows the components of a G clamp commonly used by welders in the welding industry. As a draughtsperson, you are required to draw an assembly drawing of this G clamp.

The complete parts list is as follows:

Item 1	Frame	1 off	Cast iron
Item 2	Screw	1 off	Mild steel
Item 3	Pad	1 off	Mild steel
Item 4	Tommy bar	1 off	Mild steel
Item 5	Collar	1 off	Mild steel
Item 6	Pin	1 off	Mild steel
Item 7	Cap screw	1 off	Mild steel

Draw as an assembly drawing, a full sectional front view assembly to scale 1:2, using Item 1 (Frame) in the proper working position. Draw the assembly so that Item 3 (Pad) is in an open position, 60 mm from the opposite jaw of the G clamp.

Insert item numbers on the completed assembly. (23)

HINT: Do not section Item 4 (Tommy bar) and Item 5 (Collar). (3)

Show a parts list below the completed drawing on the A2 drawing sheet or on a separate drawing sheet in the case where A4 sheets are used. (4)

[30]

QUESTION 6: BALANCED LAYOUT AND NEATNESS

Layout, neatness and general impression of the answer sheet(s). **[5]**

TOTAL: 100

Copyright reserved

DIAGRAM SHEET 1

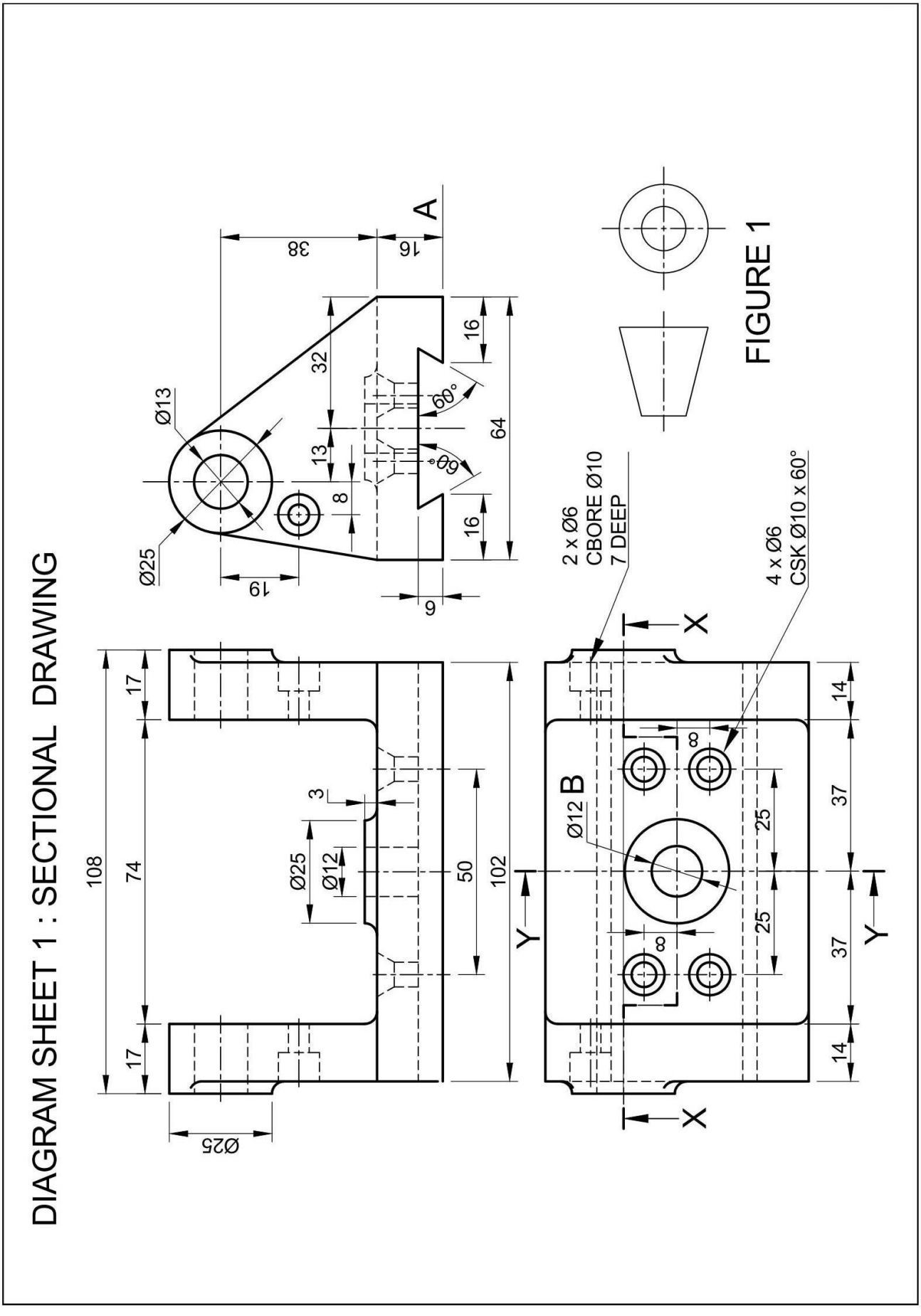

Copyright reserved

DIAGRAM SHEET 2

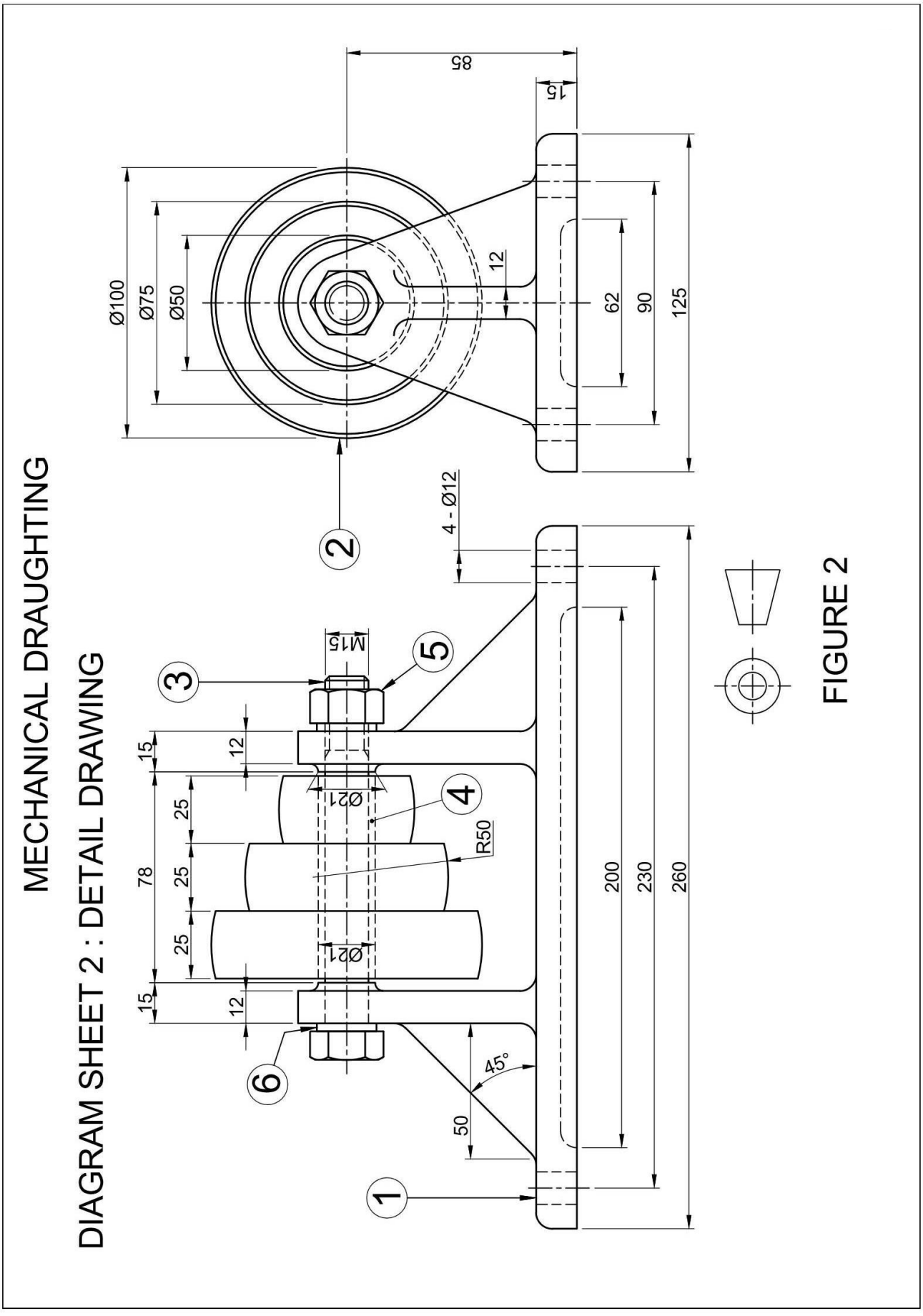

Copyright reserved

DIAGRAM SHEET 3

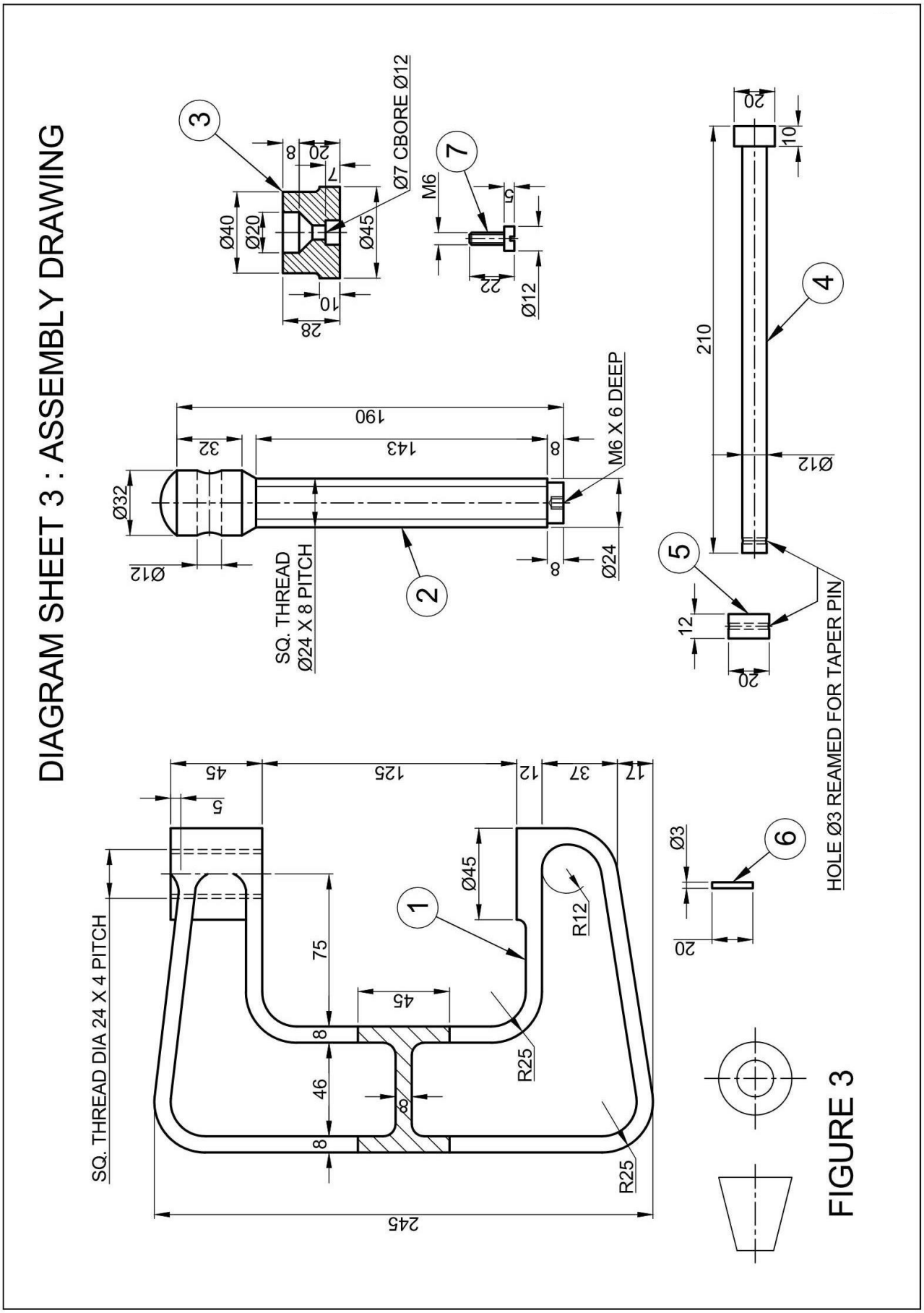

FIGURE 3

Copyright reserved