higher education & training

Department:
Higher Education and Training
REPUBLIC OF SOUTH AFRICA

T1070**(E)**(J25)T

NATIONAL CERTIFICATE

MECHANICAL DRAUGHTING N4

(8090204)

25 July 2019 (X-Paper)
09:00–13:00

CLOSED-BOOK EXAMINATION

REQUIREMENTS: **A2 drawing sheets (instrumental drawing)**
A3 and A4 drawing sheets (computer drawing)

Calculators and drawing instruments may be used.

This question paper consists of 6 pages and 3 diagram sheets.

Copyright reserved

DEPARTMENT OF HIGHER EDUCATION AND TRAINING
REPUBLIC OF SOUTH AFRICA

NATIONAL CERTIFICATE
MECHANICAL DRAUGHTING N4
TIME: 4 HOURS
MARKS: 100

INSTRUCTIONS AND INFORMATION

1. Answer ALL the questions.
2. Read ALL the questions carefully.
3. Number the answers according to the numbering system used in this question paper.
4. Candidates using pencil must use both sides of an A2 DRAWING SHEET.
5. Candidates using a computer must answer each question on a separate A3 or A4 plotted DRAWING SHEET.
6. Before any drawing work is commenced, retrieve a border from the symbols directory and display it on the screen when using a computer.
7. Print or plot ALL candidate information in the title block.
8. Candidates are responsible, under suitable supervision, for the plotting of their own answers.
9. ALL standard symbols (mechanical) may be obtained from the symbols directory.
10. Use your discretion for dimensions NOT given.
11. Use a 3 mm fillet radius for ALL radii NOT given.
12. ALL drawing work must comply with the SABS 0111-1990 Code of Practice.
13. Work neatly.

Copyright reserved

QUESTION 1: CONVENTIONAL REPRESENTATION (HELICAL SPRING)

FIGURE 1, DIAGRAM SHEET 1 (attached), shows TWO views of a release valve with a schematic representation of a cylindrical helical spring (identified as Item 5) under compression.

Do NOT copy the given drawing, but draw, to scale 3:1, a full-sectional right-handed conventional representation of the helical spring (Item 5) ready to be manufactured in the workshop.

The specifications of the helical spring is as follows:

- Free length: 50 mm
- Lead: 5 mm
- Material diameter: 2 mm
- Nominal diameter: 18 mm

Add a maximum of FOUR essential dimensions on the completed drawing. **[10]**

QUESTION 2: CAM PROFILES

A cam profile which will impart motion to a roller follower is required.

Draw, to scale 1:1, the full profile of a disc cam using the following cam data:

- Minimum diameter: 30 mm
- Stroke height (lift/fall): 34 mm
- Shaft diameter: 20 mm
- Roller diameter: 10 mm
- Performance: Rises 34 mm in the first 120° of cam rotation according to constant velocity
  Dwells for the next 60°
  Falls 34 mm in the last 180° of cam rotation according to uniform acceleration and retardation
  Rotation of cam is clockwise

Show the displacement diagram and ALL construction lines. The displacement diagram must be drawn on the left-hand side of the cam profile. The roller follower need NOT be drawn. A shaft diameter of 20 mm must be hatched accordingly. **[15]**

Copyright reserved

QUESTION 3: SECTIONAL DRAWING

FIGURE 2, DIAGRAM SHEET 2 (attached), shows THREE views of a machine part in third-angle orthographic projection.

Draw, to scale 1:1, the following views of the machine part in first-angle orthographic projection:

- A full-sectional front view on cutting plane Z-Z (9)
- A full-sectional left view on sectional plane Y-Y as shown on the front and top views (7)

Show only the following dimensions and symbols on the drawing:

- At A: A hole diameter of 36 mm with an upper deviation of +30 µm and a lower deviation of -20 µm (2)
- At B: Indicate that these planes need to be machined. The roughness value of the surface texture is 12 µm. (2)

NO dashed lines are required. **[20]**

QUESTION 4: DETAIL DRAWING

FIGURE 1, DIAGRAM SHEET 1 (attached), shows TWO views of a release valve consisting of the following:

- Item 1 – Body
- Item 2 – Cover
- Item 3 – Valve
- Item 4 – Valve seat
- Item 5 – Helical compression spring
- Item 6 – Seal ring
- Item 7 – Hexagonal socket head screw

Draw, to scale 1:1, the following views of the release valve in first-angle orthographic projection:

4.1 The body (Item 1) showing a full-sectional front view showing the drilled and tapped holes – insert any THREE dimensions on the completed drawing (11)

4.2 The valve (Item 3) showing a full-sectional front view only (9)

[20]

QUESTION 5: ASSEMBLY DRAWING

FIGURE 3, DIAGRAM SHEET 3 (attached), shows the components of a machine vice in first-angle orthographic projection. The complete list of parts is as follows:

• Item 1	Base	1 off	Cast iron
• Item 2	Jaw	1 off	Cast iron
• Item 3	Screw	1 off	Mild steel
• Item 4	Clamping plate	1 off	Mild steel
• Item 5	Locking plate	1 off	Mild steel
• Item 6	Lever	1off	Mild steel
• Item 7	Stop block	1 off	Mild steel
• Item 8	M12 hexagonal nut	1 off	Mild steel
• Item 9	M6 countersunk screw	4 off	Mild steel
• Item 10	Washer	1 off	Mild steel

Draw, to scale 1:1, an assembly drawing showing a full-sectional front view of the machine vice in an open position with the jaw 65 mm apart between the clamping plates (Item 4). (18)

Also draw the square screw thread (Item 3) according to conventional representation with Item 6 (lever) and Item 7 (stop block) in a horizontal position. (4)

Number ALL items on the completed assembly drawing. (3)

Show a parts list below the completed drawing on the A2 DRAWING SHEET or on a separate DRAWING SHEET in the case where A4 sheets are used. (5)

[30]

QUESTION 6: BALANCED LAYOUT AND NEATNESS

Layout, neatness and general impression of the DRAWING SHEETS **[5]**

TOTAL: 100

Copyright reserved

DIAGRAM SHEET 1

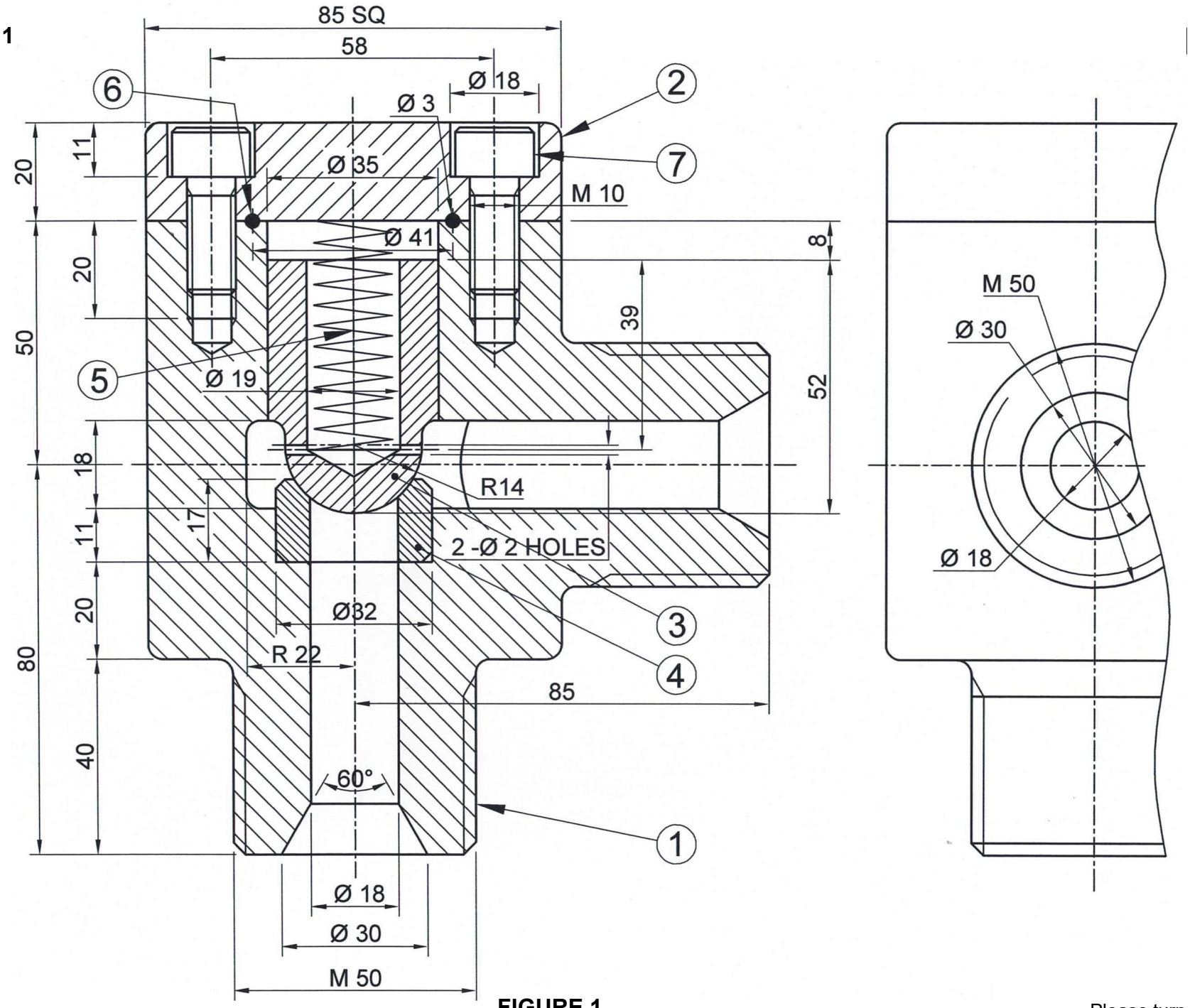

FIGURE 1

Copyright reserved

DIAGRAM SHEET 2

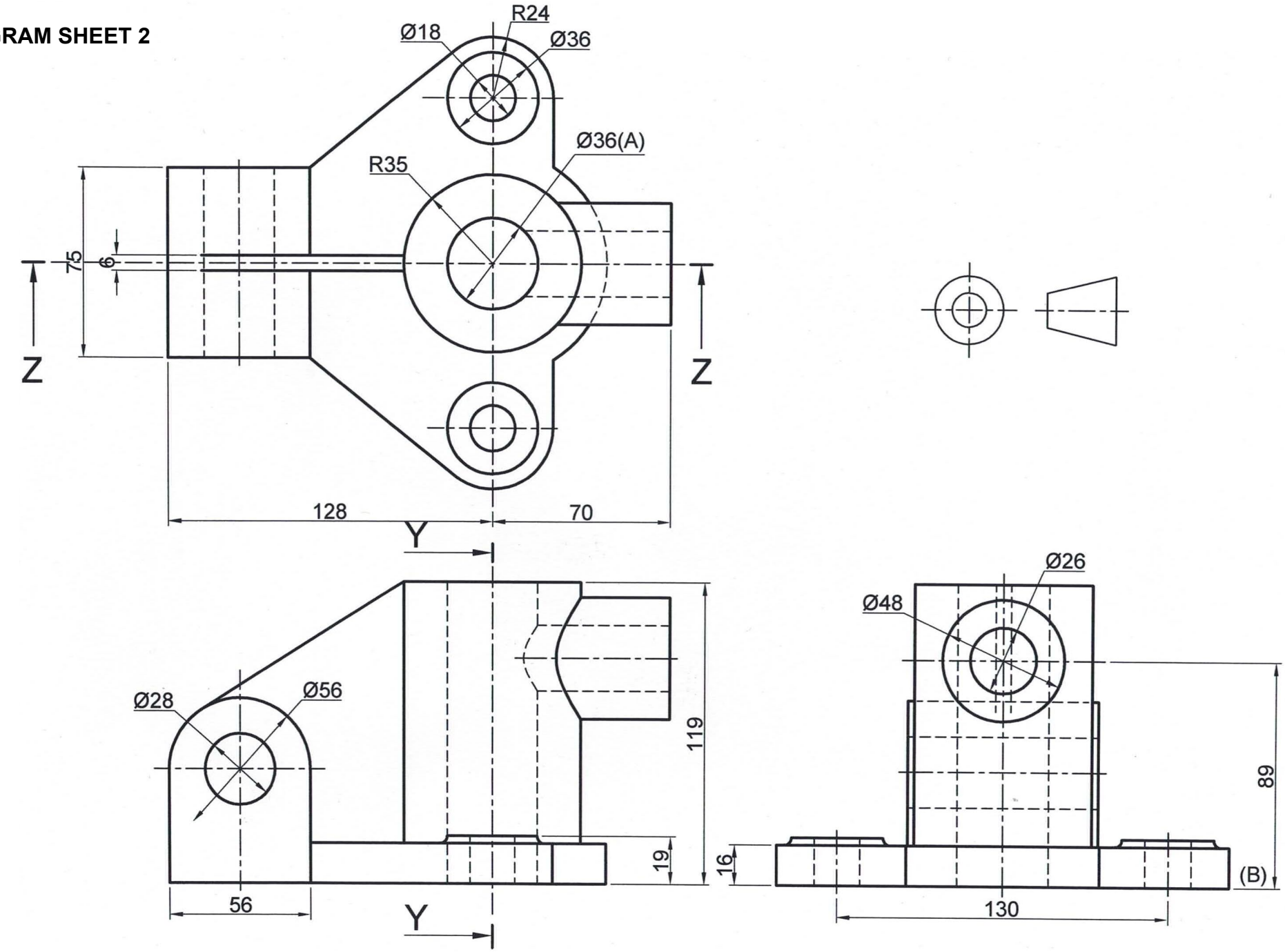

FIGURE 2

Copyright reserved

DIAGRAM SHEET 3

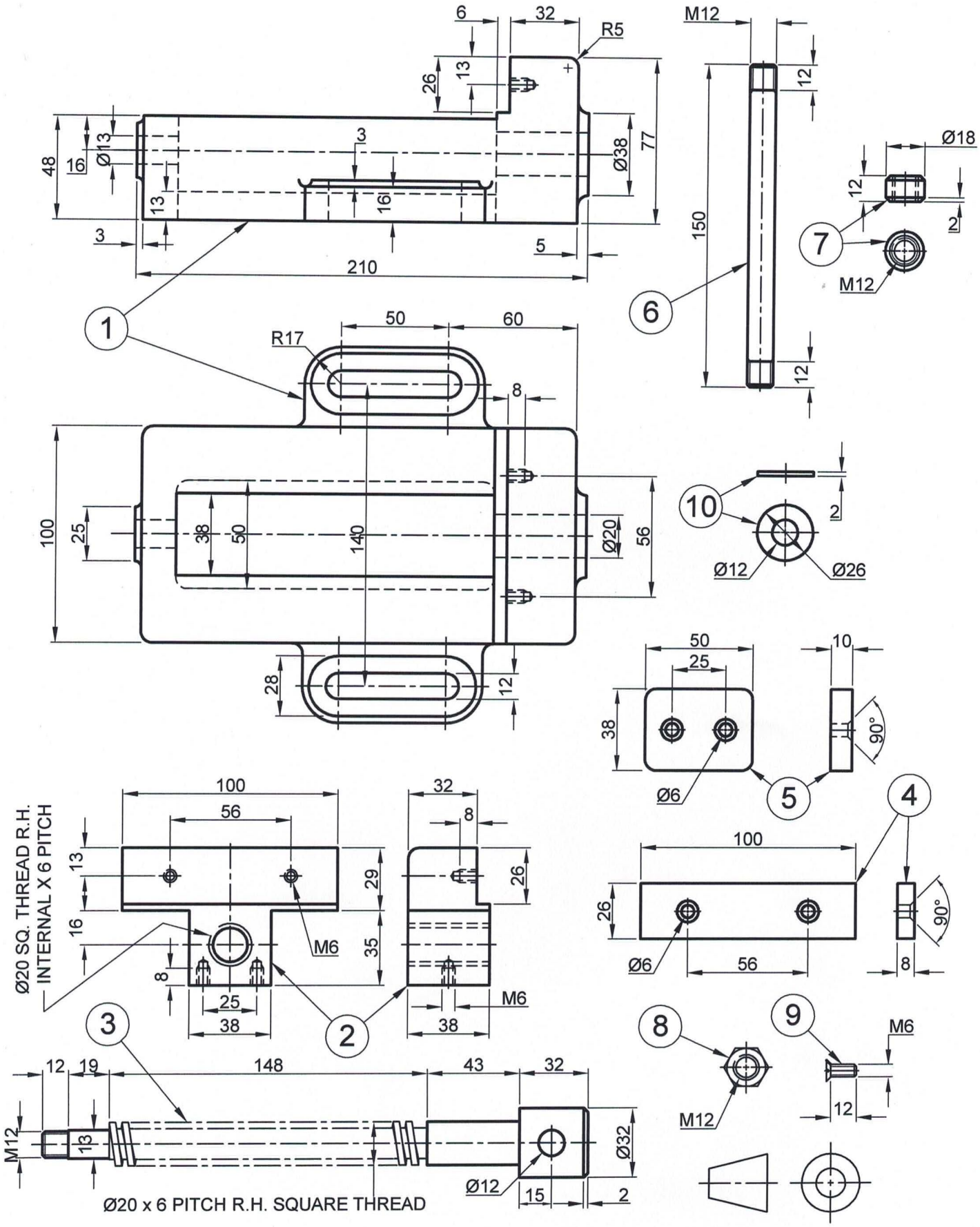

FIGURE 3

Copyright reserved