higher education & training

Department:
Higher Education and Training
REPUBLIC OF SOUTH AFRICA

MARKING GUIDELINE

NATIONAL CERTIFICATE

MECHANICAL DRAUGHTING N4

25 JULY 2019

This marking guideline consists of 7 pages.

Copyright reserved

QUESTION 1: CONVENTIONAL REPRESENTATION (HELICAL SPRING)

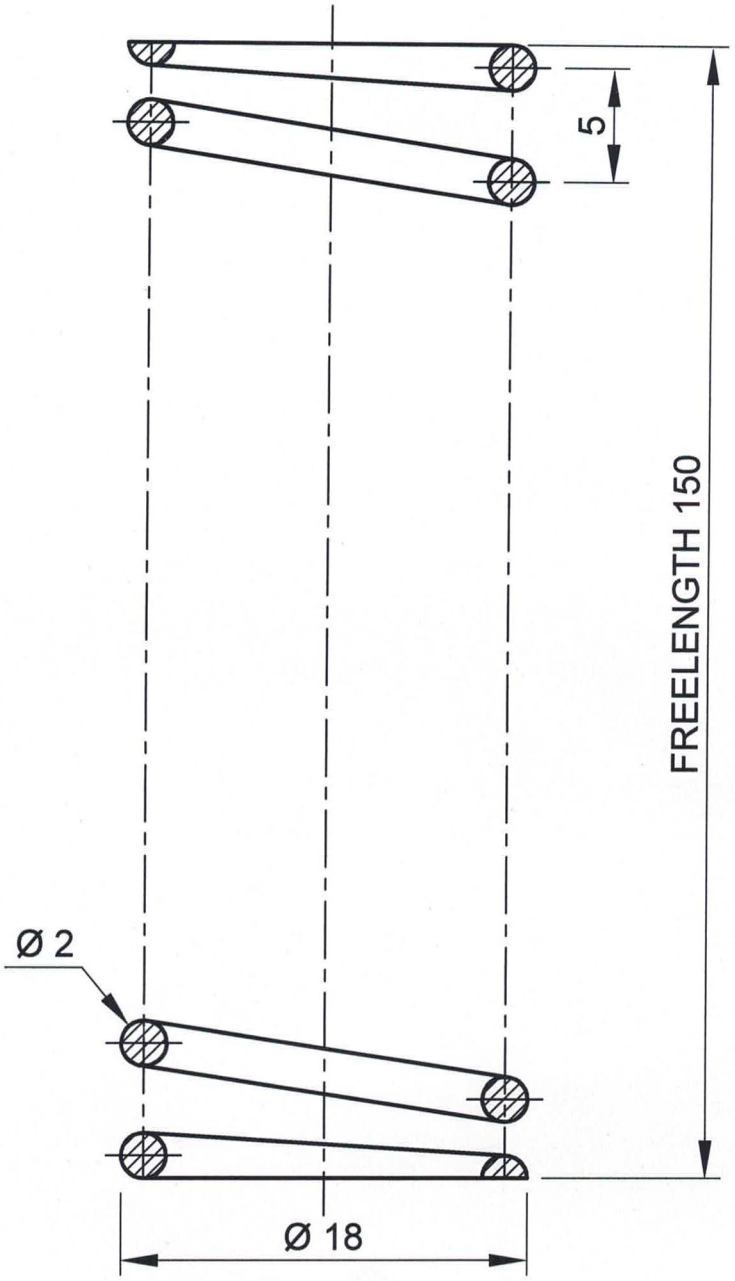

Correctness	=	3%
Line work	=	3%
Accuracy	=	2%
Direction	=	1%
Dimensions	=	1%

[10]

QUESTION 2: CAM PROFILES

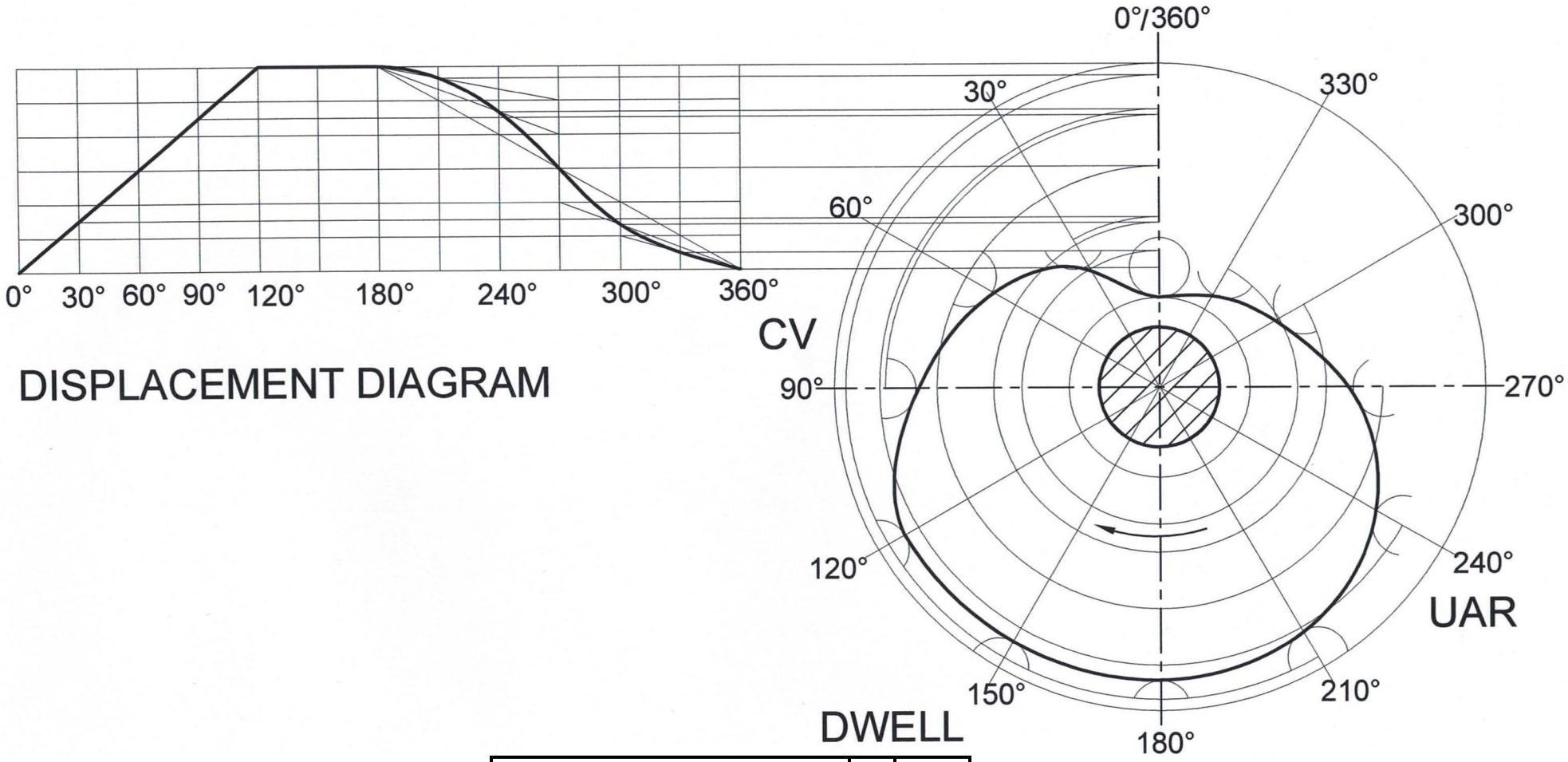

Displacement diagram	=	3%
Cam profile	=	6%
Line work	=	2%
Accuracy	=	3%
Keyway detail	=	1%

[15]

QUESTION 3: SECTIONAL DRAWING

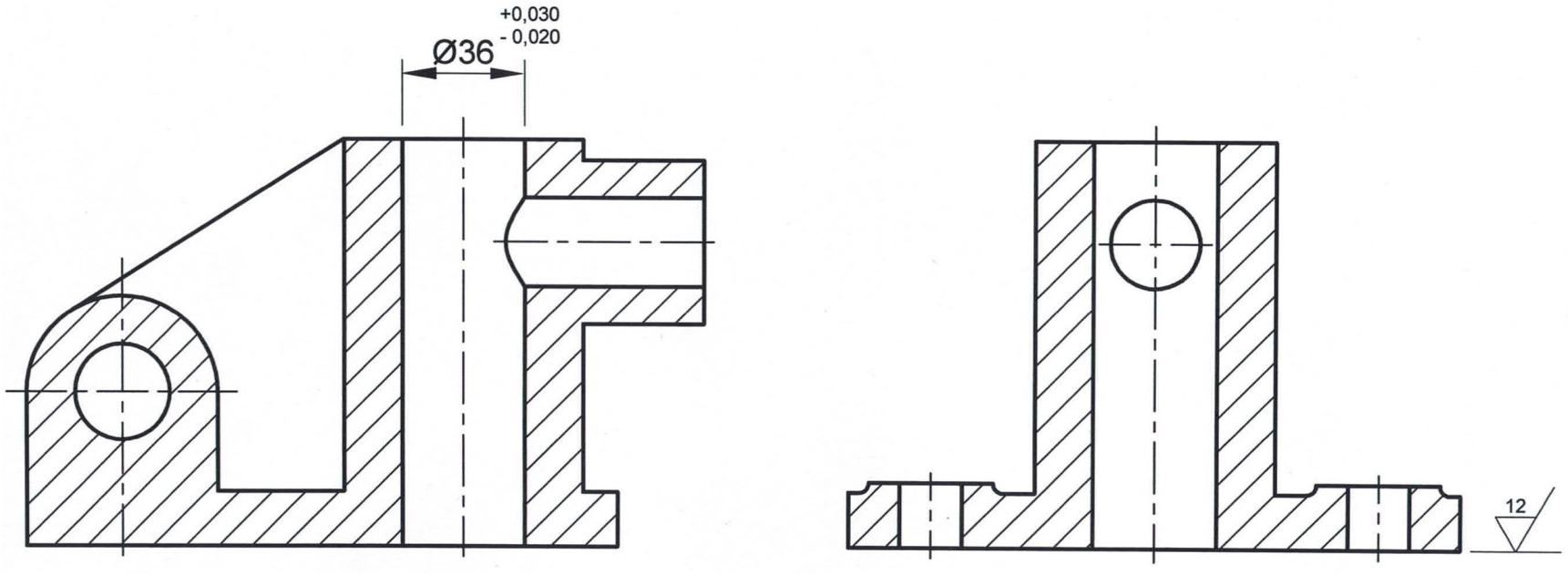

Correctness	=	10%
Line work	=	4%
Accuracy	=	2%
Symbols at A and B	=	4%

[20]

QUESTION 4: DETAIL DRAWING

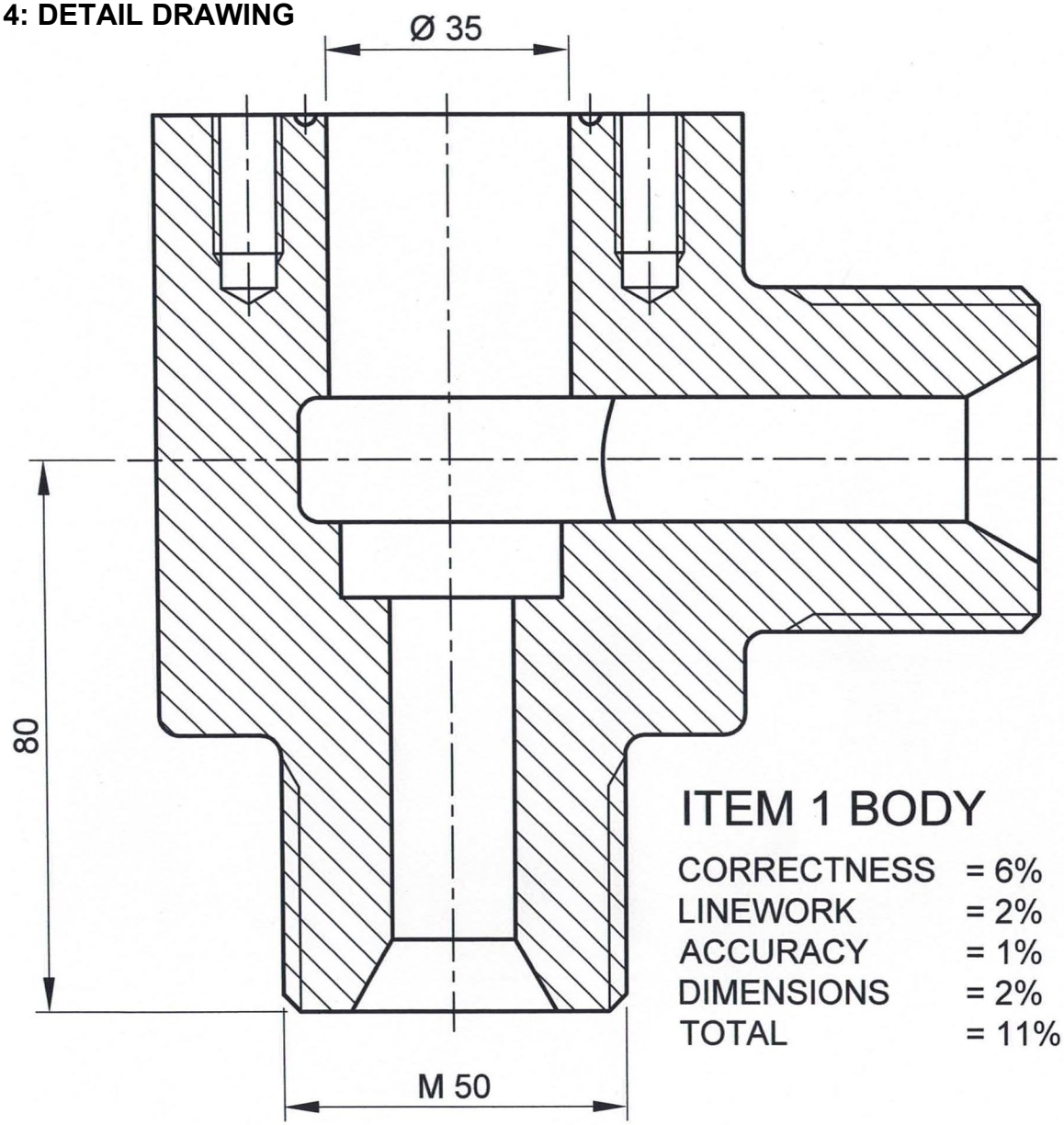

ITEM 1 BODY

CORRECTNESS	= 6%
LINEWORK	= 2%
ACCURACY	= 1%
DIMENSIONS	= 2%
TOTAL	= 11%

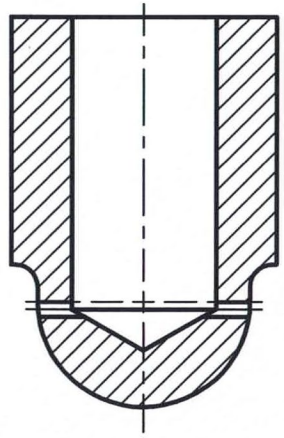

ITEM 3 VALVE

CORRECTNESS	= 4%
LINEWORK	= 3%
ACCURACY	= 2%
TOTAL	= 9%

[20]

QUESTION 5: ASSEMBLY DRAWING

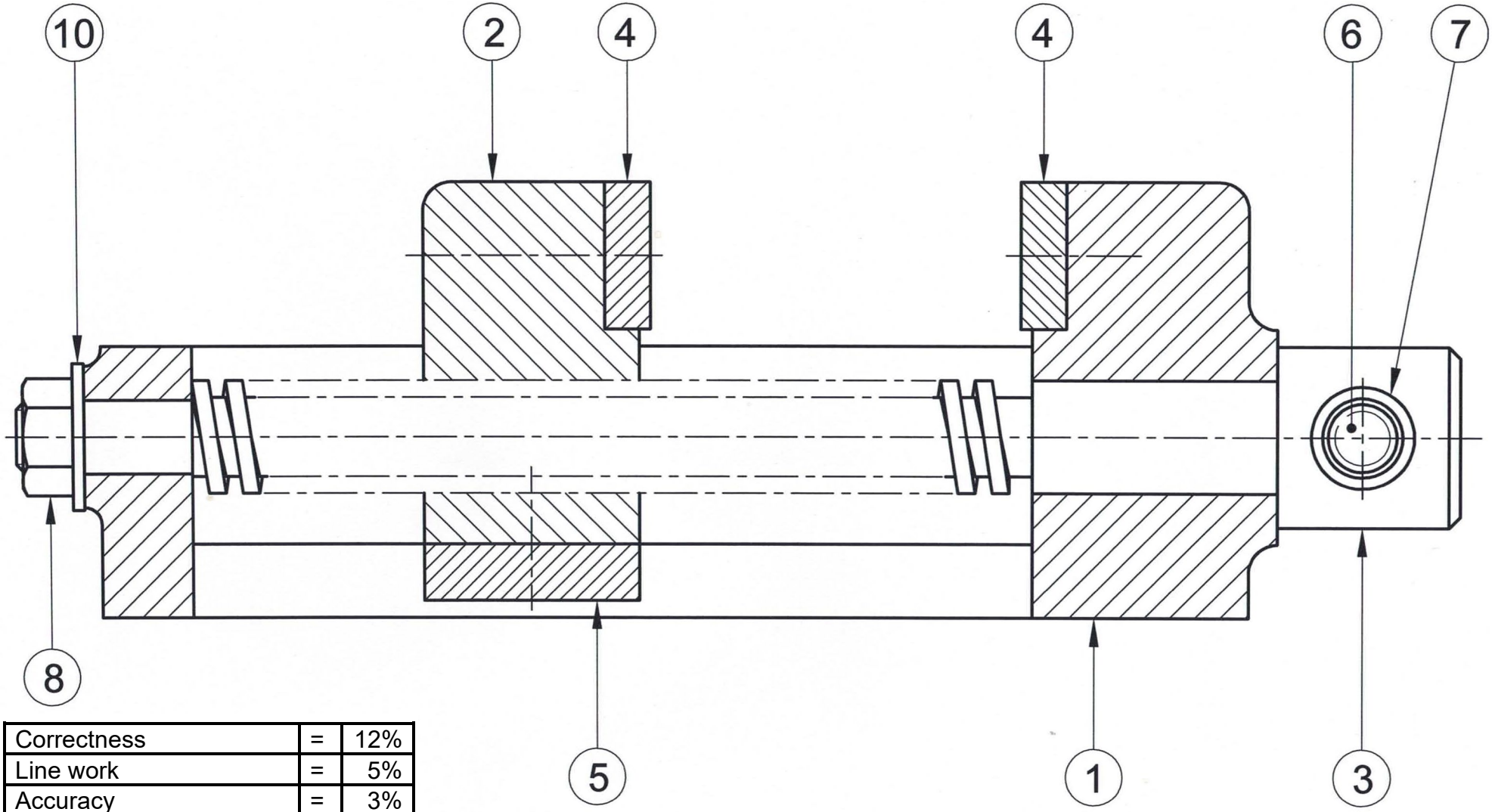

Correctness	=	12%
Line work	=	5%
Accuracy	=	3%
Item numbers	=	3%
Thread/Key details	=	3%
Parts list	=	4%

Copyright reserved

PARTS LIST			
ITEM NUMBER	PART NAME	QUANTITY	MATERIAL
ITEM 1	BASE	1 OFF	CAST IRON
ITEM 2	JAW	1 OFF	CAST IRON
ITEM 3	SCREW	1 OFF	MILD STEEL
ITEM 4	CLAMPING PLATE	2 OFF	MILD STEEL
ITEM 5	LOCKING PLATE	1 OFF	MILD STEEL
ITEM 6	LEVER	1 OFF	MILD STEEL
ITEM 7	STOP BLOCK	2 OFF	MILD STEEL
ITEM 8	HEXAGONAL NUT	1 OFF	MILD STEEL
ITEM 9	COUNTERSUNK SCREW	4 OFF	MILD STEEL
ITEM 10	WASHER	1 OFF	MILD STEEL

[30]

QUESTION 6: BALANCED LAYOUT AND NEATNESS

Layout, neatness and general impression of the DRAWING SHEETS **[5]**

TOTAL: 100

Copyright reserved