higher education & training

Department:
Higher Education and Training
REPUBLIC OF SOUTH AFRICA

T1070**(E)**(J23)T

NATIONAL CERTIFICATE

MECHANICAL DRAUGHTING N4

(8090204)

23 July 2018 (X-Paper)
09:00–13:00

REQUIREMENTS: ONE A2 drawing sheet

Calculators and drawing instruments may be used.

This question paper consists of 9 pages.

Copyright reserved

DEPARTMENT OF HIGHER EDUCATION AND TRAINING
REPUBLIC OF SOUTH AFRICA

NATIONAL CERTIFICATE
MECHANICAL DRAUGHTING N4
TIME: 4 HOURS
MARKS: 100

INSTRUCTIONS AND INFORMATION

1. Answer ALL the questions.
2. Read ALL the questions carefully.
3. Number the answers according to the numbering system used in this question paper.
4. Use both sides of the DRAWING SHEET.
5. Draw a 15 mm border on both sides of the DRAWING SHEET.
6. ALL drawing work, including candidate information, must be done in pencil.
7. ALL drawing work must conform to the latest SABS 0111 Code of Practice for Engineering Drawing.
8. A radius curve stencil may be used to draw smaller arcs.
9. Unspecified radii must be 3 mm.
10. A balanced layout is very important and candidates will be penalised for poor planning.
11. Estimate ALL dimensions not shown in a reasonable proportion.
12. Work neatly.

Copyright reserved

QUESTION 1: DISC CAMS

Cams are found in most branches of engineering to turn rotary motion into a perpendicular lift away from the shaft.

You are required by your supervisor to draw, to scale 1 : 1, a full profile of a disc cam for a motor manufacturing company with the following specifications:

Follower: Knife-edge

Cam data:

Shaft diameter:	30 mm
Minimum diameter:	40 mm
Stroke height (lift/fall):	36 mm
Performance:	Rises 36 mm in the first 180° of cam rotation according to simple harmonic motion. Falls 36 mm in the next 180° of cam rotation according to constant velocity. The rotation of the cam is anticlockwise.

Show the displacement diagram and ALL construction lines. The displacement diagram must be drawn on the left-hand side of the cam profile.

NOTE: The knife-edge follower need not be drawn. **[15]**

QUESTION 2: COMPRESSION SPRING

Control of motion in machines can be achieved by a helical compression spring.

You, as the design technician of your company, must prepare the working drawing for a left-hand helical compression spring. The sectional front view of the spring must be drawn according to conventional representation and scale 1 : 1 with the following spring data:

Outside diameter:	64 mm
Lead:	16 mm
Free length:	144 mm
Wire size:	8 mm

[10]

Copyright reserved

QUESTION 3: SECTIONAL DRAWING

FIGURE 1 on the next page shows two views of a machine casting.

Draw, to scale 1 : 1, the following views of the casting in third-angle orthographic projection:

3.1 A sectional front view on cutting plane X–X (9)

3.2 A sectional right view on cutting plane Y–Y (7)

Insert only the following symbols and dimensions on the drawing:

3.3 At A: Indicate that a hole with a diameter of 20 mm has an upper deviation of 15 micrometres and a lower deviation of -10 micrometres. (1)

3.4 At B: Indicate a distance of 45 mm with an upper deviation of 10 micrometres and a lower deviation of -15 micrometres. (1)

3.5 At C: Indicate that a surface texture with a roughness value of 25 micrometre must be produced by turning. (2)

Copyright reserved

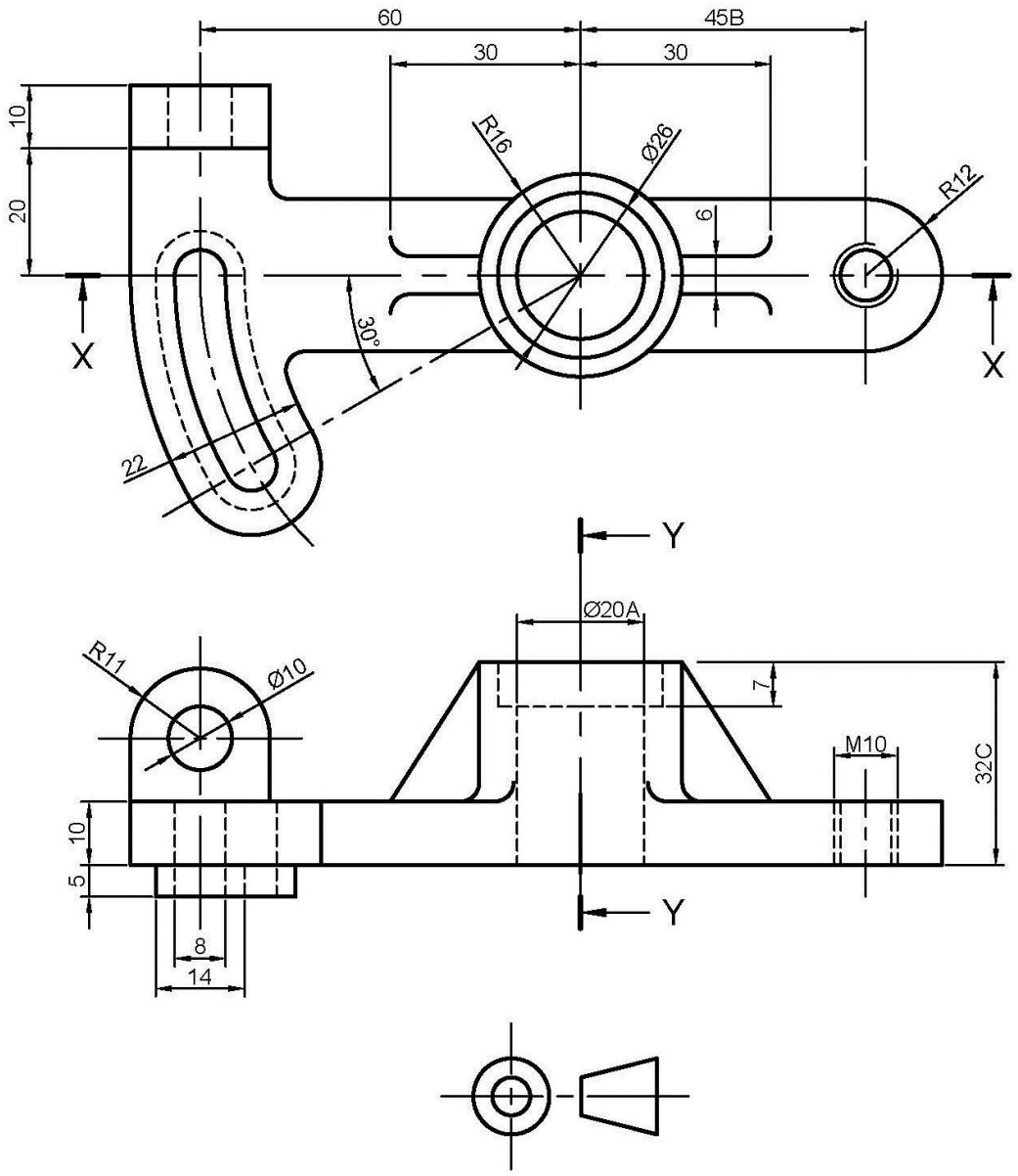
60
45B
30
30
10
20
R16
Ø26
R12
6
X
X
30°
22
Y
Ø20A
R11
Ø10
7
M10
32C
10
5
Y
8
14

FIGURE 1 **[20]**

QUESTION 4: DETAIL DRAWING

FIGURE 2 on the next page shows two views of a clamping device assembly which consists of the following:

ITEM	DESCRIPTION
1	Base
2	G-clamp
3	Workpiece
4	Screw
5	Pin
6	Locating pin

Draw, to scale 1 : 1, detailed drawings of the following components in third-angle orthographic projection:

4.1 The base (item 1) a full-sectional front view on X-X (5)

4.2 The G-clamp (item 2) showing the following:

4.2.1 A full-sectional front view on X-X (5)

4.2.2 A right view (6)

4.2.3 A top view (6)

Copyright reserved

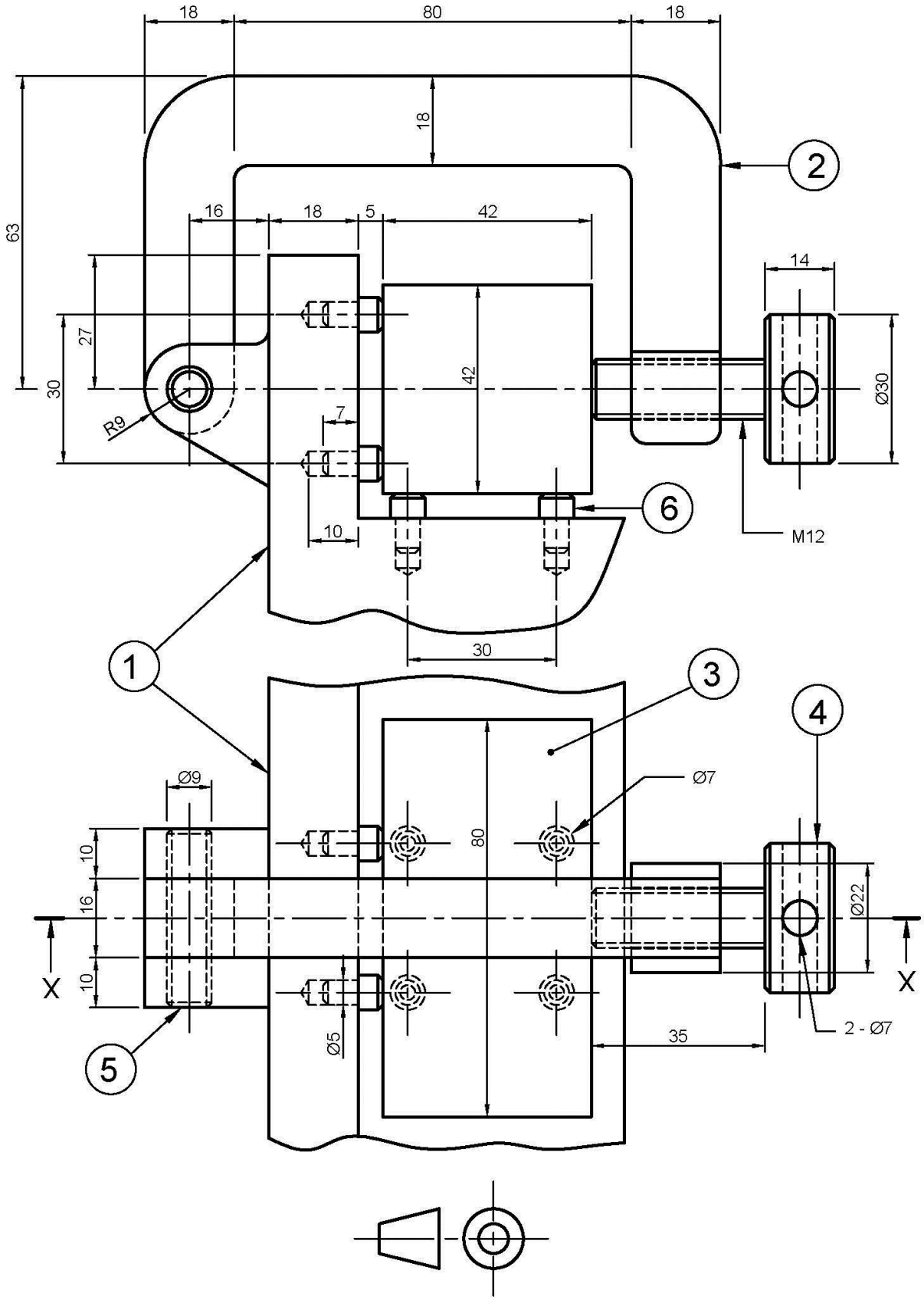
18
80
18
18
63
2
16
18
5
42
14
27
42
30
Ø30
R9
7
6
10
M12
30
1
3
4
Ø9
Ø7
10
80
16
Ø22
X
X
10
Ø5
35
2 - Ø7
5

FIGURE 2 **[22]**

QUESTION 5: ASSEMBLY DRAWING

FIGURE 3 on the next page shows the components of a screw jack.

The complete list of parts is as follows:

ITEM	PART	AMOUNT	MATERIAL
Item 1	Body	1	Cast iron
Item 2	Screw spindle	1	Mild steel
Item 3	Tommy bar	1	Mild steel
Item 4	Cup	1	Cast steel
Item 5	Special washer	1	Mild steel
Item 6	Nut	1	Gun metal
Item 7	Screw	1	Mild steel

Draw, to scale 1 : 1, an assembly drawing showing a half-sectional front view of the screw jack with the right half in section.

Show hidden detail on the half not in section.

Copyright reserved

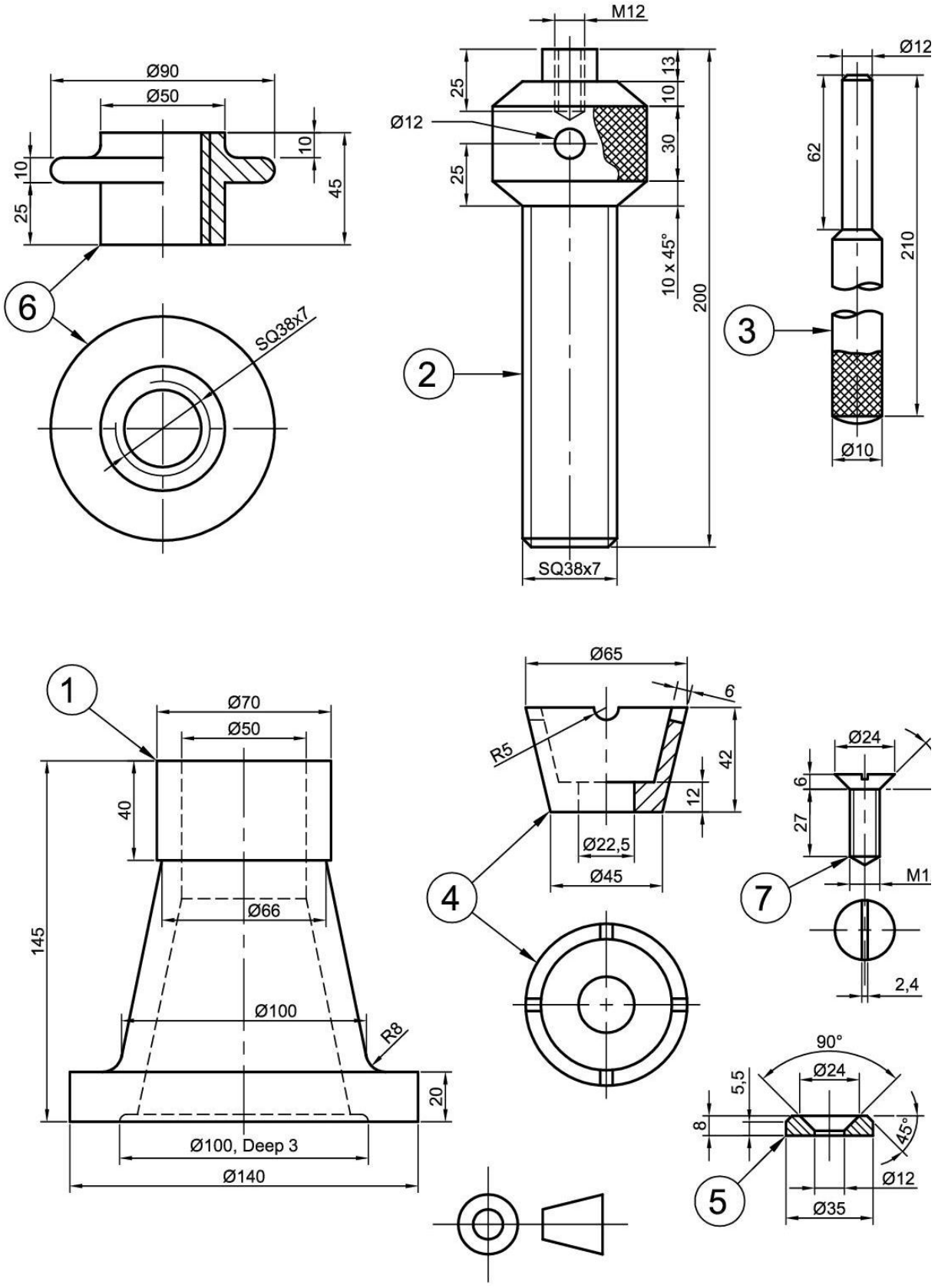

FIGURE 3 **[28]**

NOTE: Layout, neatness and general impression of the ANSWER SHEET. **[5]**

TOTAL: 100

Copyright reserved