higher education & training

Department:
Higher Education and Training
REPUBLIC OF SOUTH AFRICA

# MARKING GUIDELINE

## NATIONAL CERTIFICATE

## MECHANICAL DRAUGHTING N4

**23 JULY 2018**

**This marking guideline consists of 7 pages.**

Copyright reserved

## INSTRUCTIONS AND INFORMATION

1. To ALL marking centre managers: Copying and transferring of drawings from CAD to MS Word may affect the accuracy of drawings.

2. Therefore ALL markers must have a fully completed marking guideline to use in the marking process.

3. If candidates draw this paper on CAD and each drawing is on individual pages, 1 mark for each drawing on each page should be awarded for neatness and layout.

Copyright reserved 

## QUESTION 1: DISC CAMS

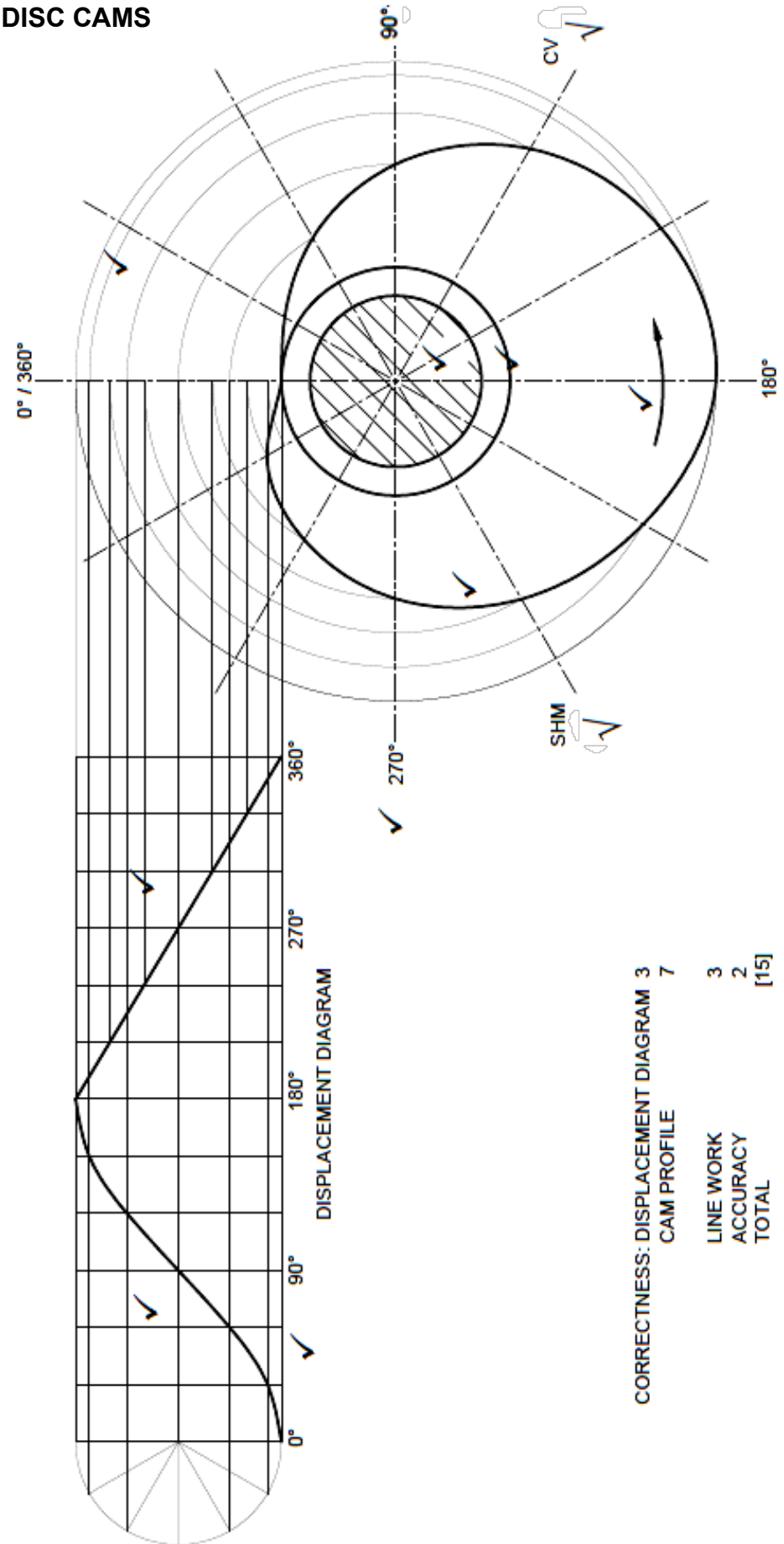


CORRECTNESS: DISPLACEMENT DIAGRAM 3
CAM PROFILE 7
LINE WORK 3
ACCURACY 2
TOTAL [15]

✓ = 1 MARK
√ = ½ MARK

**[15]**

## QUESTION 2: COMPRESSION SPRING

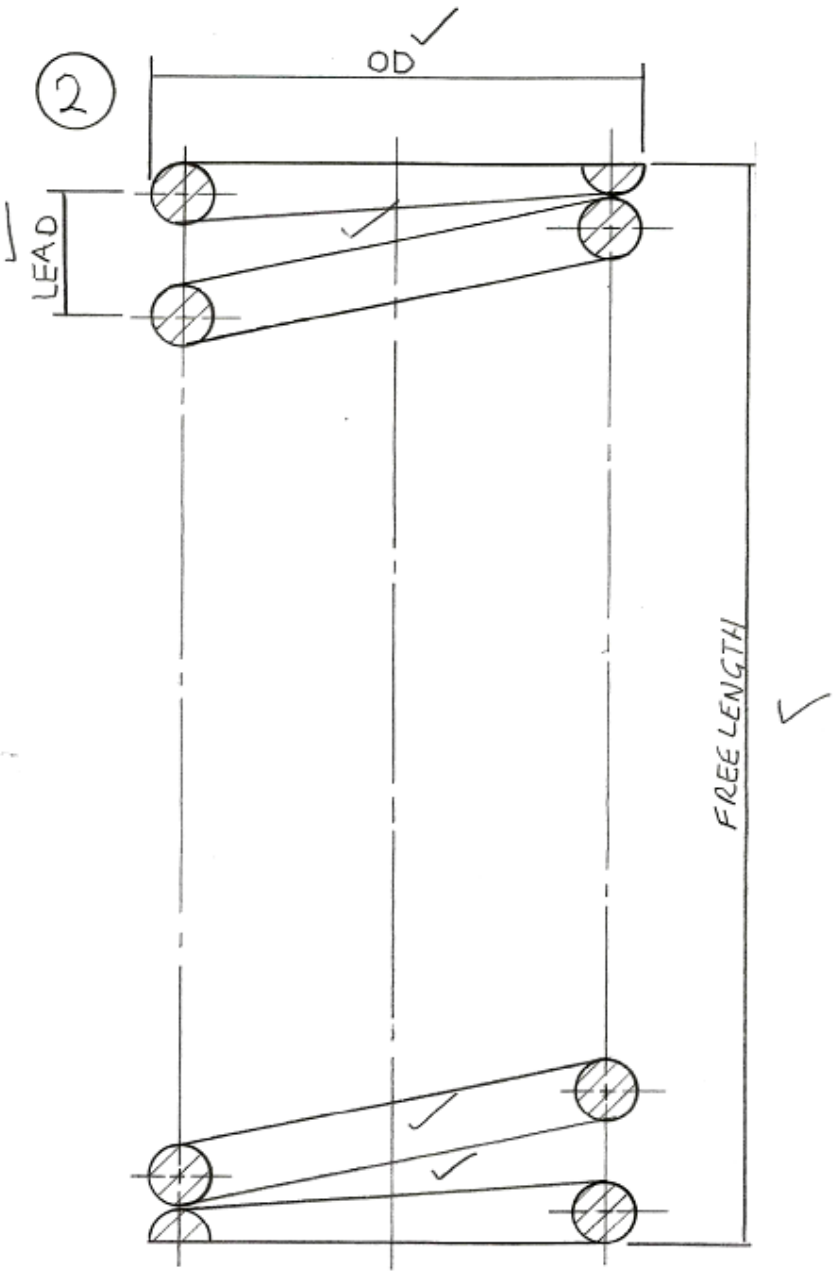


| | | |
|---|---|---|
| CORRECTNESS: | CORRECT VIEW | 2 |
| CORR/ACCURACY IN TERMS OF | OD | 1 |
| | LEAD/PITCH | 1 |
| | FREE LENGTH | 1 |
| | WIRE SIZE | 1 |
| | DIRECTION | 1 |
| | LINE WORK | 3 |
| | TOTAL | [10] |

**[10]**

## QUESTION 3: SECTIONAL DRAWING

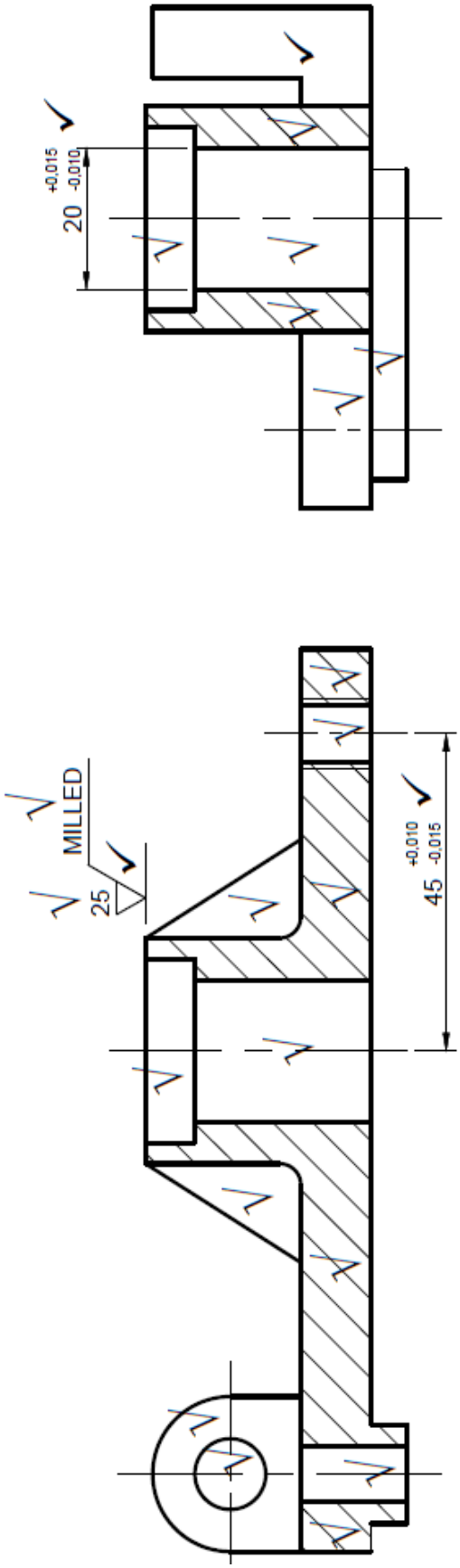


| | |
|---|---|
| Correctness FV | 6 |
| Correctness RV | 4 |
| Line work | 3 |
| Accuracy | 3 |
| Symbol A | 1 |
| Symbol B | 1 |
| Symbol C | 2 |
| Total | [20] |

√ = 1 MARK

√ = ½ MARK

**[20]**

## QUESTION 4: DETAIL DRAWING

4.1

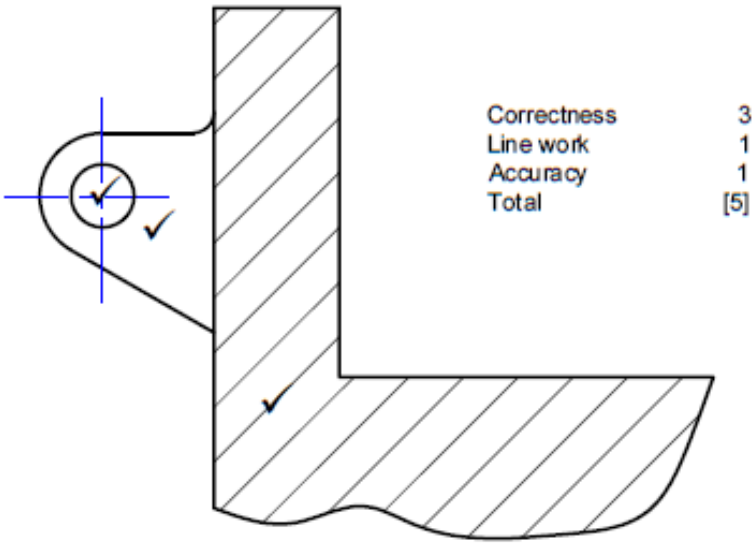


4.2

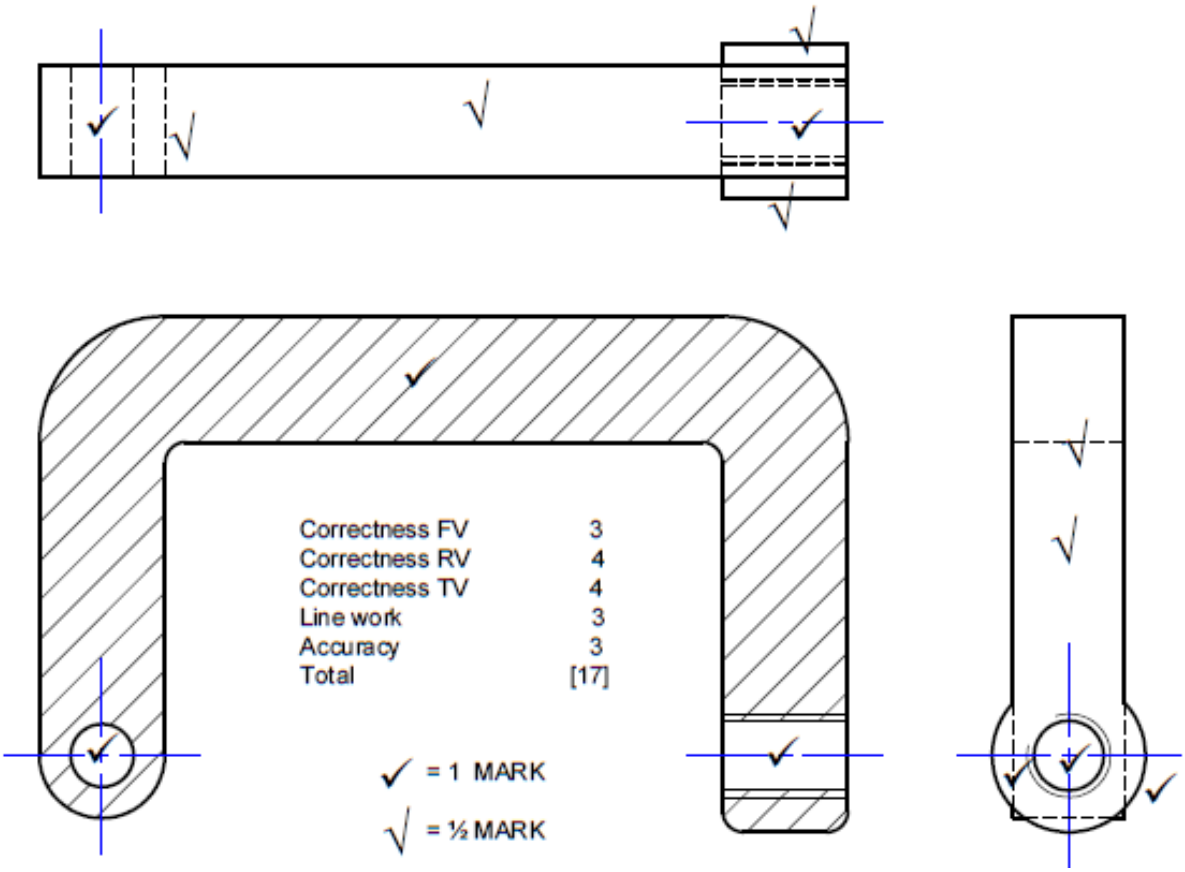


**[22]**

**QUESTION 5: ASSEMBLY DRAWING**

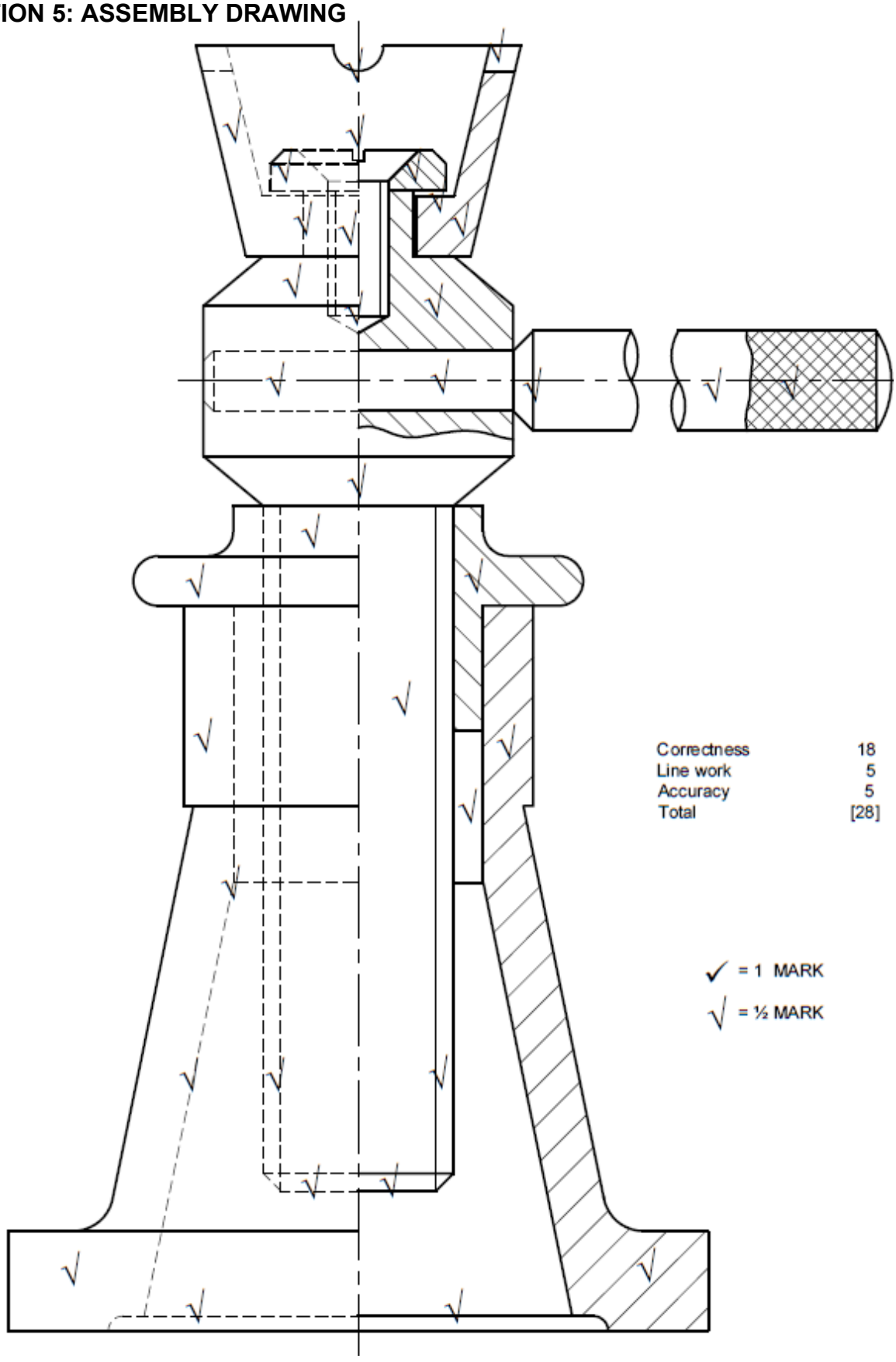


**[28]**

Layout, neatness and general impression of the ANSWER SHEET. **[5]**

**TOTAL: 100**

Copyright reserved