higher education & training

Department:
Higher Education and Training
REPUBLIC OF SOUTH AFRICA

# MECHANICAL DRAUGHTING N4

(8090204)

**13 April 2021 (X-paper)**
**09:00–13:00**

**REQUIREMENTS:** **A2 drawing sheets (instrumental drawing)**
**A3 and A4 drawing sheets (computer drawing)**

**3D CAD software may NOT be used.**

**Calculators and drawing instruments may be used.**

**This question paper consists of 5 pages and 3 diagram sheets.**

321Q1A2113

Copyright reserved

# DEPARTMENT OF HIGHER EDUCATION AND TRAINING
# REPUBLIC OF SOUTH AFRICA

NATIONAL CERTIFICATE: MULTI-DISCIPLINARY DRAWING OFFICE PRACTICE
MECHANICAL DRAUGHTING N4
TIME: 4 HOURS
MARKS: 100

---

**INSTRUCTIONS AND INFORMATION**

1. Answer all the questions.
2. Read all the questions carefully.
3. Number the answers according to the numbering system used in this question paper.
4. Candidates using pencil must use both sides of an A2 DRAWING SHEET.
5. Candidates using a computer must answer each question on a separate A3 or A4 plotted DRAWING SHEET.
6. When using a computer, before starting with any drawing work, a border must be retrieved from the symbols directory and displayed on the screen.
7. All the candidate information must be printed or plotted in the title block.
8. Candidates are responsible, under suitable supervision, for the plotting of their own answers.
9. All the standard symbols (mechanical) may be obtained from the symbols directory.
10. Use your own discretion where dimensions are not given.
11. Use a 3 mm fillet radius for all radii not given.
12. All drawing work must comply with the SANS 0111-1990 Code of Practice.
13. Work neatly.

---

Copyright reserved 

## QUESTION 1: CONVENTIONAL REPRESENTATION (SCREW THREAD)

You are a draughtsperson in a small engineering workshop and was asked to draw an external left-hand square screw thread for manufacturing.

The drawing must be done according to the conventional method in order that it may be done speedily.

The details given are as follows:

- Screw thread length 120 mm
- Pitch 20 mm
- Nominal diameter 80 mm

Draw the thread in a vertical position on the DRAWING SHEET. **[10]**

## QUESTION 2: CAM PROFILES

A cam profile which will impart motion to a knife-edge follower is required.

Draw, to scale 1:1, the full profile of a disc-cam using the following information:

CAM DATA

- Minimum diameter 30 mm
- Stroke height (lift/fall) 40 mm
- Shaft diameter 20 mm
- Performance The cam rises 40 mm in the first 90° of cam rotation according to constant velocity.
  Dwells for the next 90°.
  Falls 40 mm in the next 90° of cam rotation according to simple harmonic motion then dwells for the last 90°.
  Rotation of cam is clockwise.

Show the displacement diagram and all construction lines.

The displacement diagram must be drawn on the left-hand side of the cam profile. The knife-edge follower need not be drawn.

The shaft diameter of 20 mm must be hatched accordingly. **[15]**

Copyright reserved 

## QUESTION 3: SECTIONAL DRAWING

DIAGRAM SHEET 1 (attached), shows three views of a machine part in first-angle orthographic projection. ⌘

Draw, to scale 1:1 and in first-angle orthographic projection, the following views of the machine part:

3.1 A full-sectional front view on cutting plane A-A as seen from the side view. (9)

3.2 A full-sectional top view on sectional plane B-B as shown on the front view. (7)

Show only the following dimensions and symbols on the drawing:

At C: A hole diameter of 20 mm with an upper deviation of +15 µm and a lower deviation of -15 µm.

At D: A hole diameter of 15 mm with an upper deviation of +13 µm and a lower deviation of -13 µm.

⌘ (2 × 2) (4)
**[20]**

## QUESTION 4: DETAIL DRAWING

DIAGRAM SHEET 2 (attached), shows two half-sectional views of a pivot assembly which consists of the following:

- Item 1 – Base
- Item 2 – Coupling block
- Item 3 – Pin
- Item 4 – Split pin ⌘
- Item 5 – Washer

Draw, to scale 1:1 and in first-angle orthographic projection, detail drawings of the following parts:

4.1 The base (item 1) showing the following views:

4.1.1 A full-sectional front view on cutting plane Z-Z. (5)

4.1.2 A full-sectional left view ⌘ (6)

Do not show any dashed lines on the drawing.

Copyright reserved 

4.2 The coupling block (item 2) showing the following:

4.2.1 An outside front view ⌘ (4)

4.2.2 A full-sectional left view (5)

Show dashed lines for the drilled and tapped hole in the outside view only.

**[20]**

## QUESTION 5: ASSEMBLY DRAWING

DIAGRAM SHEET 3 (attached), shows the components of a fixture to hold a workpiece to be machined in a milling machine. The complete list of parts is as follows:

| | | | |
|---|---|---|---|
| • Item 1 | Base | 1 of | Cast iron |
| • Item 2 | G-clamp | 1 of | Cast iron |
| • Item 3 | Workpiece | 1 of | Mild steel |
| • Item 4 | Screw | 1 of | Mild steel |
| • Item 5 | Pin | 1 of | Mild steel |
| • Item 6 | Locating pin | 8 of | Mild steel |

Draw an assembly drawing to scale 1:1, showing the following: ⌘

A full-sectional front view of the fixture with the workpiece in place. (23)

HINT: Use the side view as the proper position of the workpiece in the fixture clamp.

Number all the items on your completed assembly drawing. (3)

Show a parts list below the completed drawing on the A2 DRAWING SHEET or on a separate DRAWING SHEET where A4 SHEETS are used. (4)

**[30]**

⌘

## QUESTION 6: BALANCED LAYOUT AND NEATNESS

Layout, neatness and general impression of the DRAWING SHEETS. **[5]**

**TOTAL: 100**

Copyright reserved

**DIAGRAM SHEET 1**

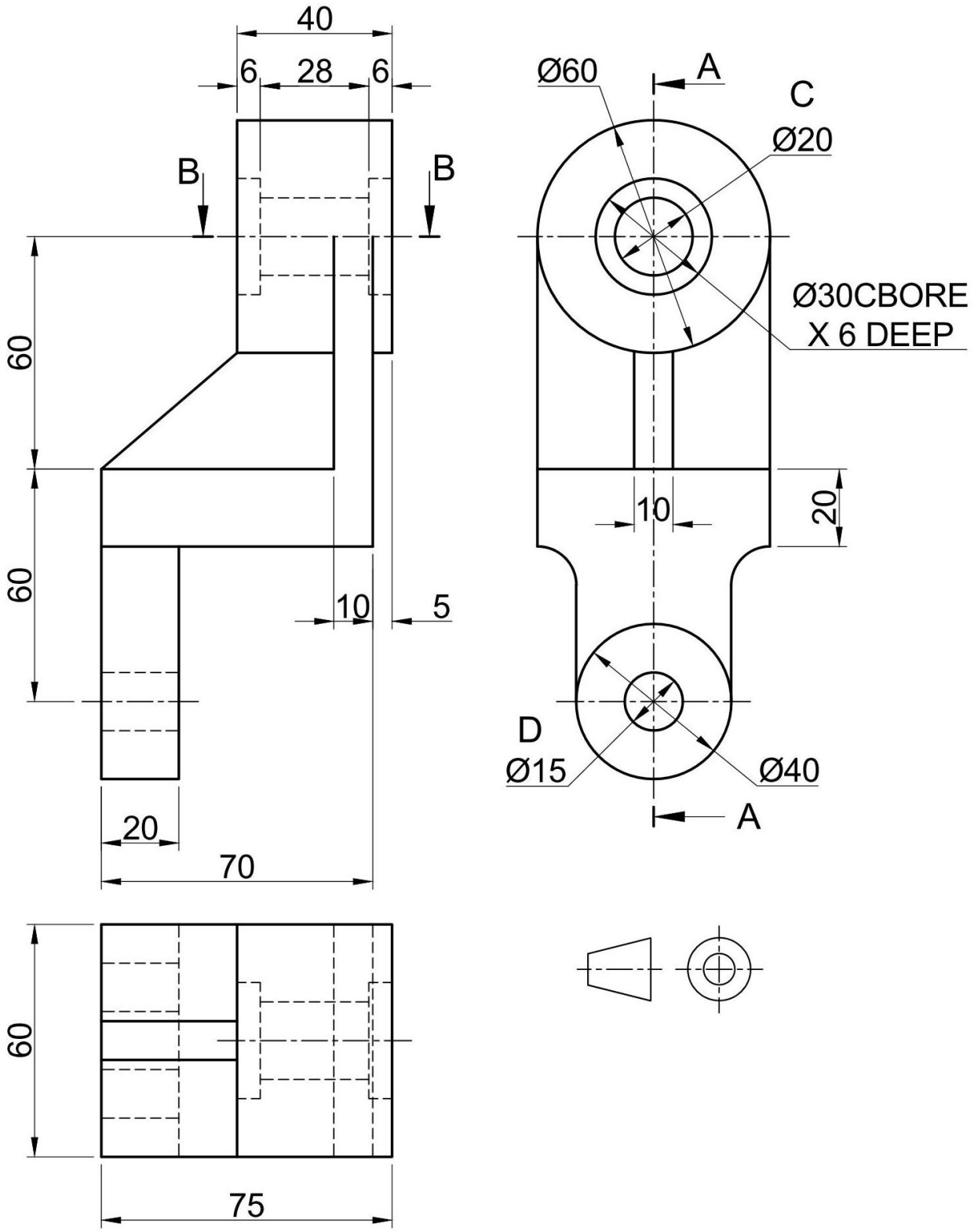


**SECTIONAL DRAWING**

Copyright reserved 

**DIAGRAM SHEET 2**

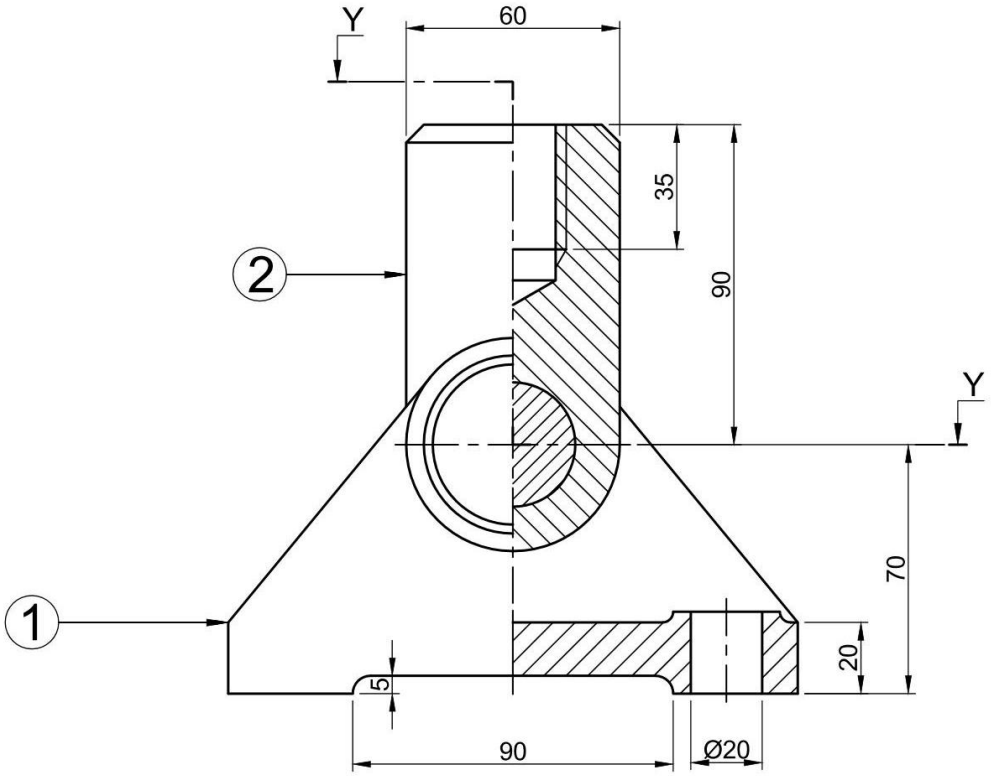


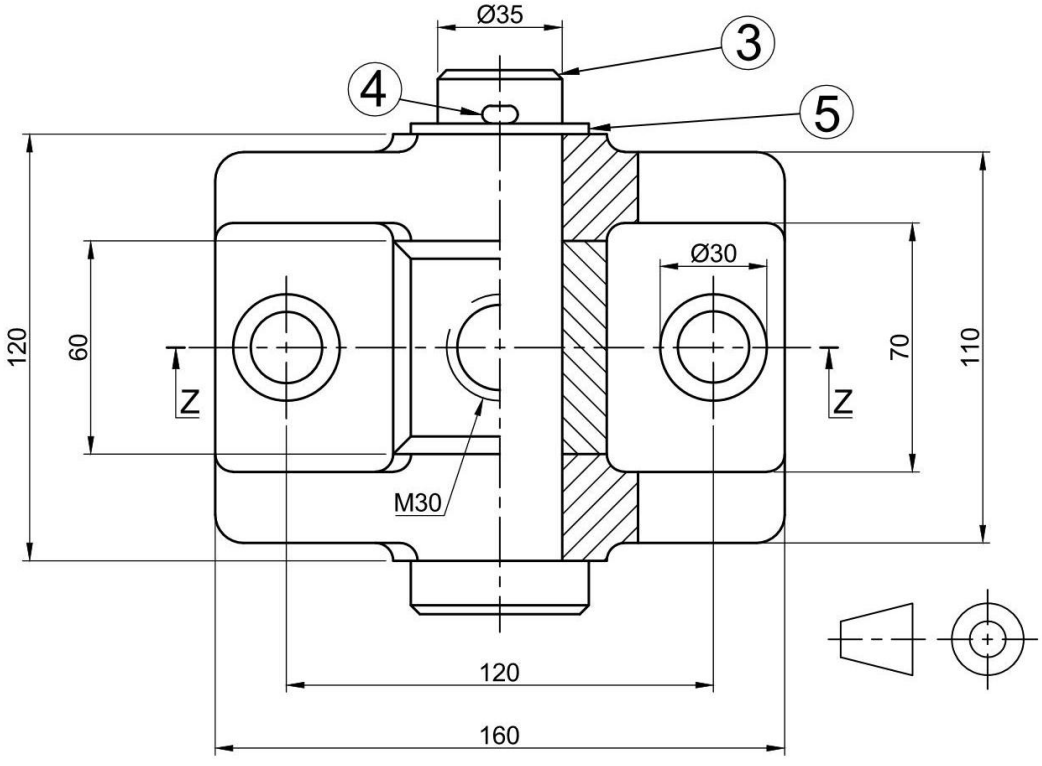


**DETAIL DRAWING**

Copyright reserved 

**DIAGRAM SHEET 3**

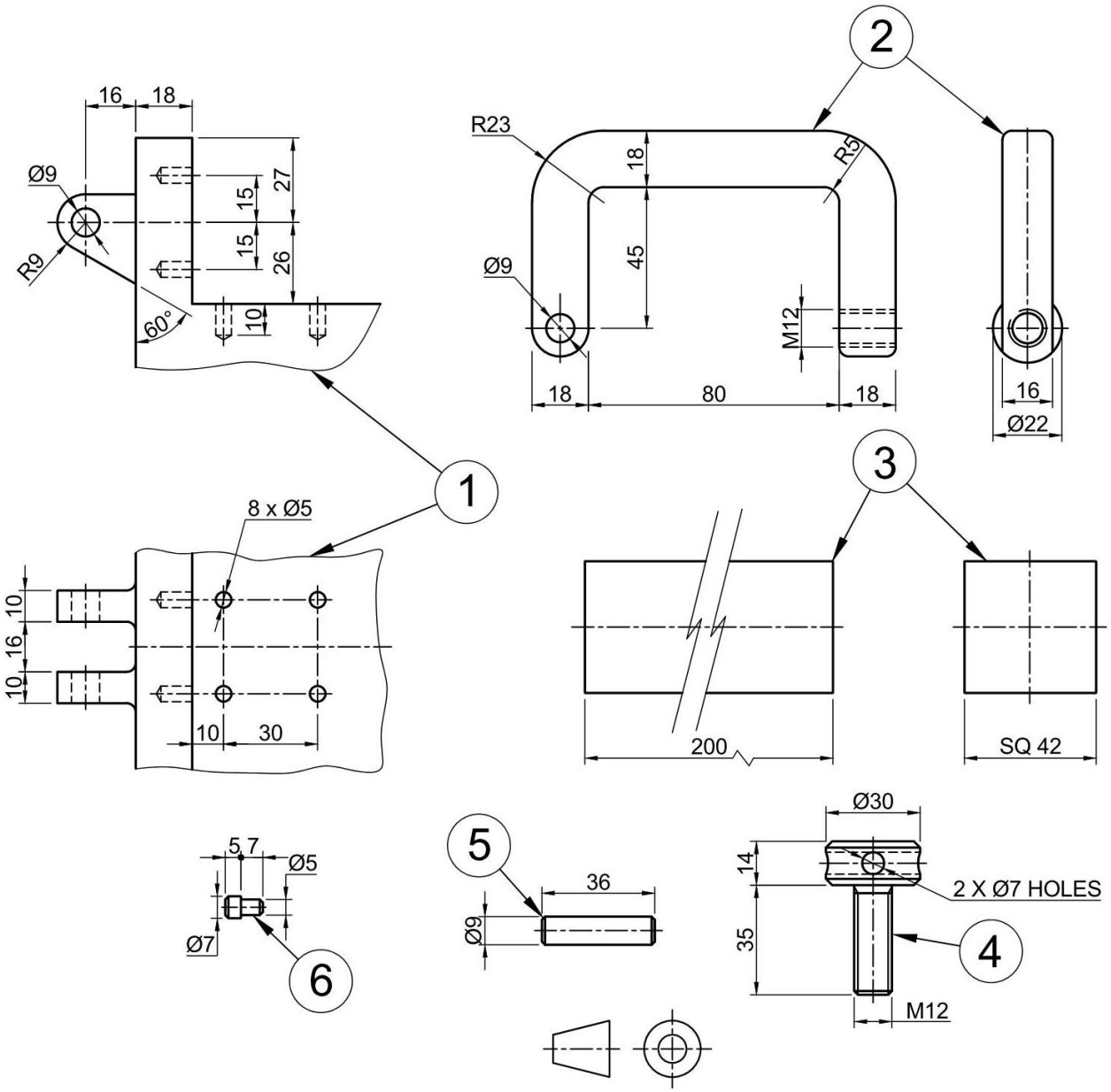


**ASSEMBLY DRAWING**

Copyright reserved