higher education & training

Department:
Higher Education and Training
REPUBLIC OF SOUTH AFRICA

MARKING GUIDELINE

NATIONAL CERTIFICATE: MULTI-DISCIPLINARY DRAWING OFFICE PRACTICE

MECHANICAL DRAUGHTING N4

13 April 2021

This marking guideline consists of 8 pages.

Copyright reserved

QUESTION 1

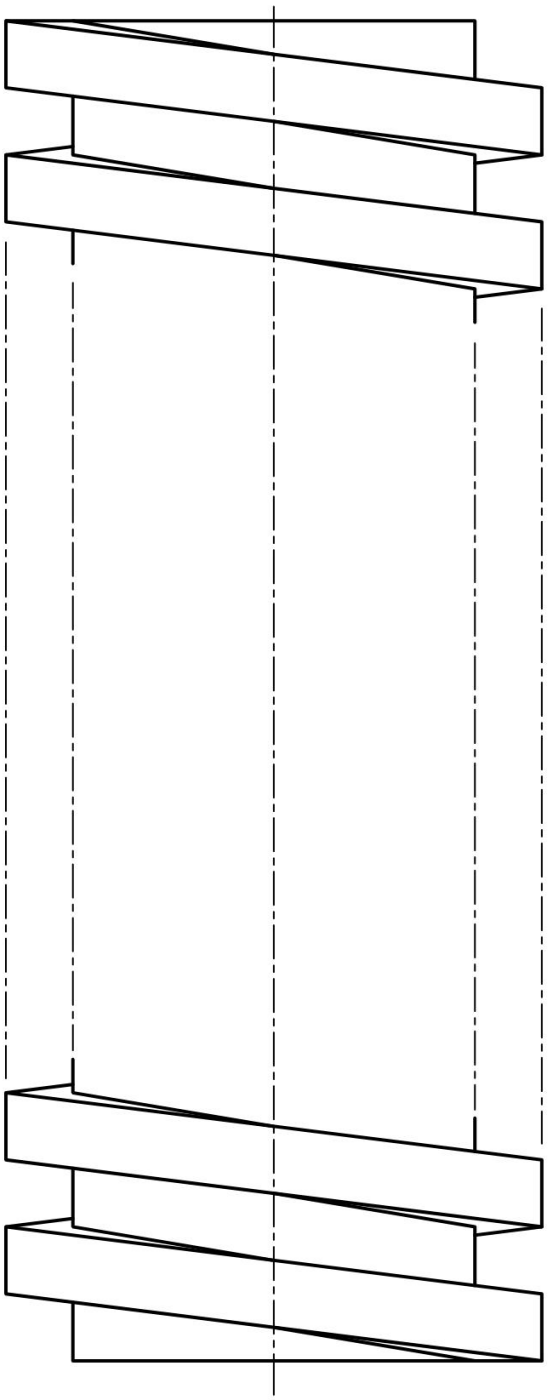

CORRECTNESS	=	4%
LINEWORK	=	3%
ACCURACY	=	2%
SCREW DIRECTION	=	15
TOTAL	=	10%

Copyright reserved

QUESTION 2

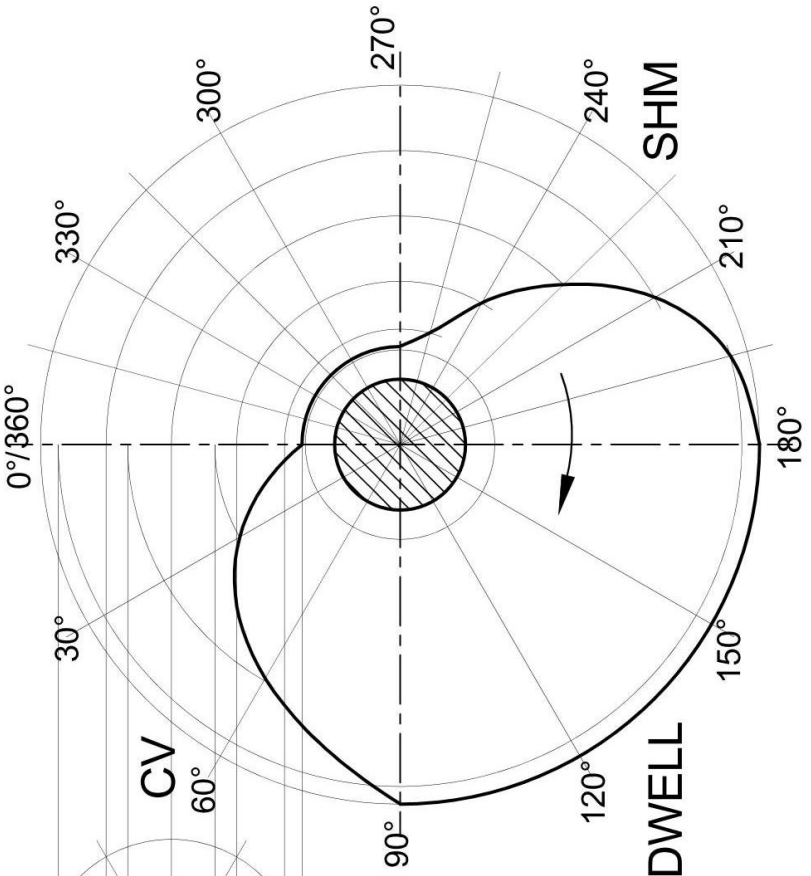

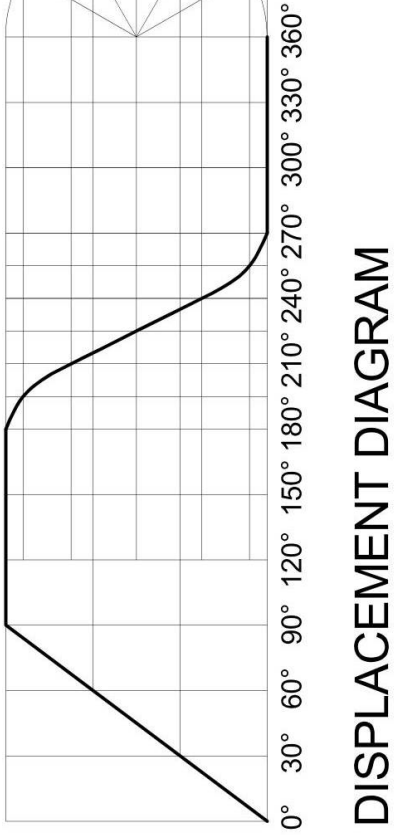

DISPLACEMENT DIAGRAM	=	3%
CAM PROFILE	=	6%
LINEWORK	=	3%
ACCURACY	=	2%
KEYWAY DETAIL	=	1%
TOTAL	=	15%

Copyright reserved

QUESTION 3

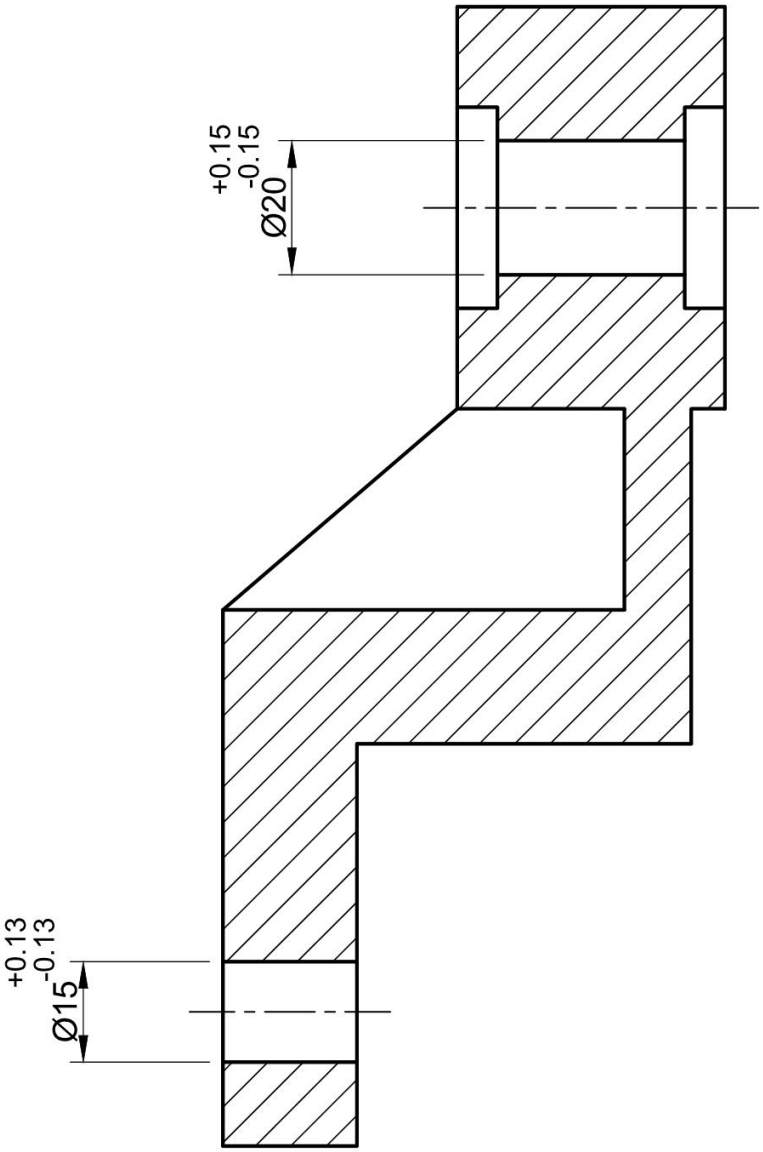

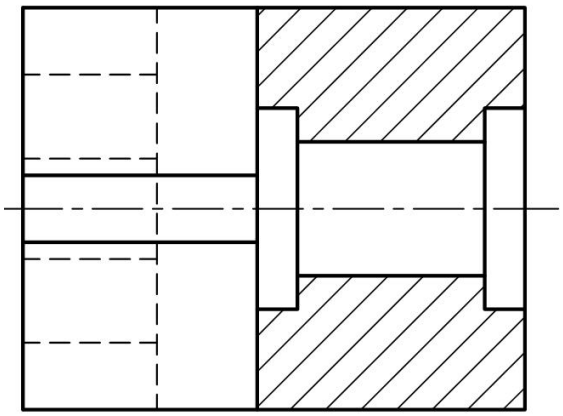

CORRECTNESS FV	=	6%
CORRECTNESS TV	=	5%
LINEWORK	=	3%
ACCURACY	=	2%
SYMBOLS AT C AND D	=	4%
TOTAL	=	20%

Copyright reserved

QUESTION 4

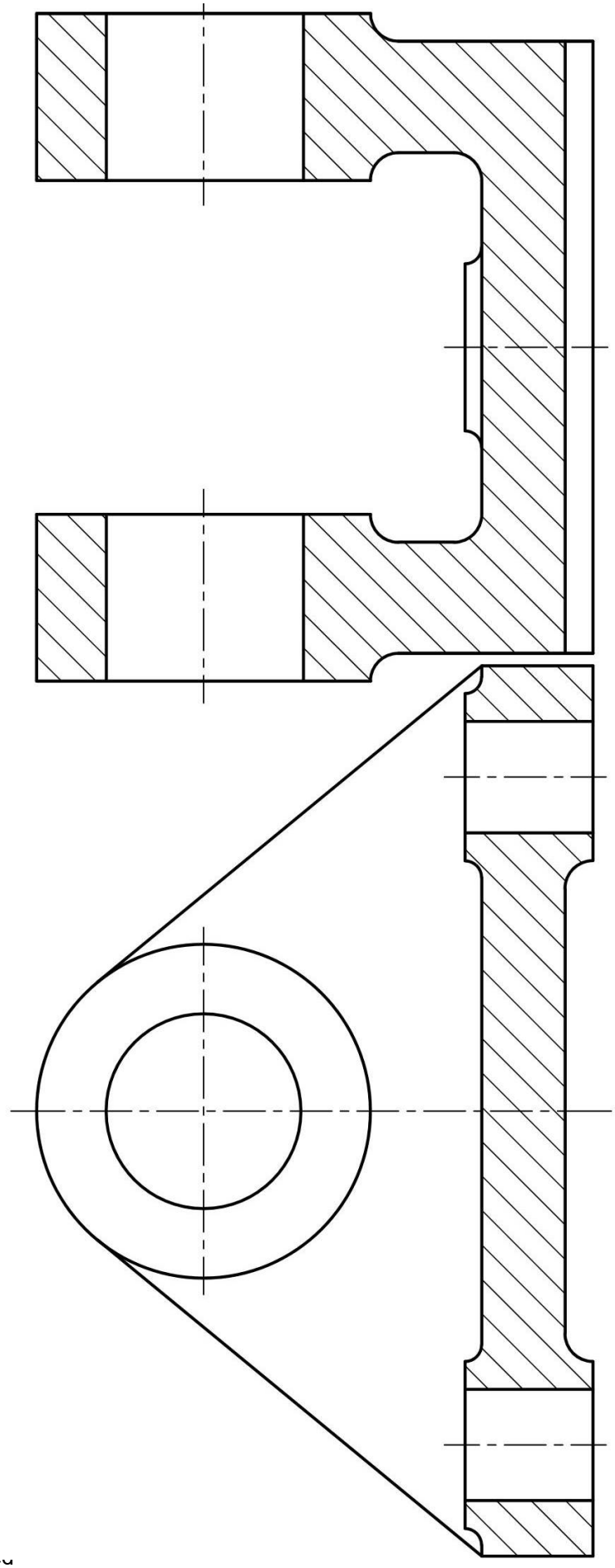

ITEM 1 BASE

CORRECTNESS SFV	=	3%%
CORRECTNESS SLV	=	3%
LINEWORK	=	3%
ACCURACY	=	2%
TOTAL	=	11%

Copyright reserved

QUESTION 4

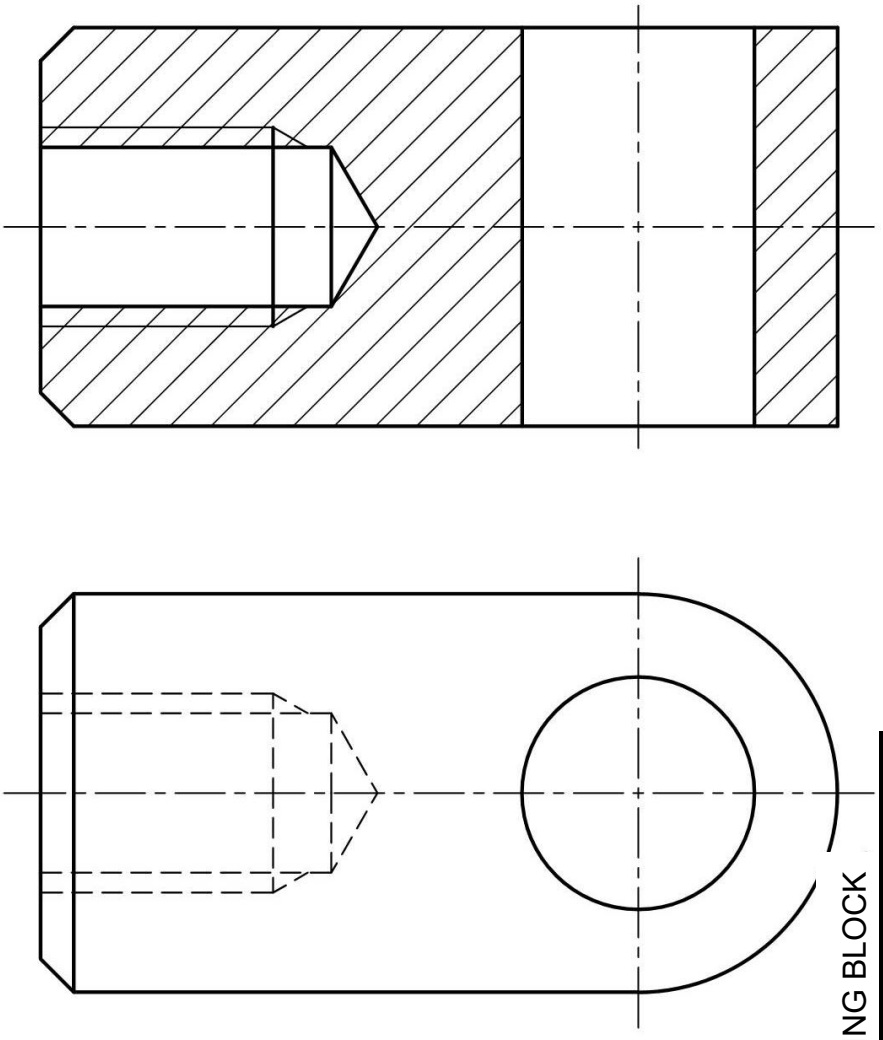

ITEM 2 COUPLING BLOCK

CORRECTNESS OFV	=	3%
CORRECTNESS SLV	=	3%
LINEWORK	=	2%
ACCURACY	=	1%
TOTAL	=	9%

QUESTION 5

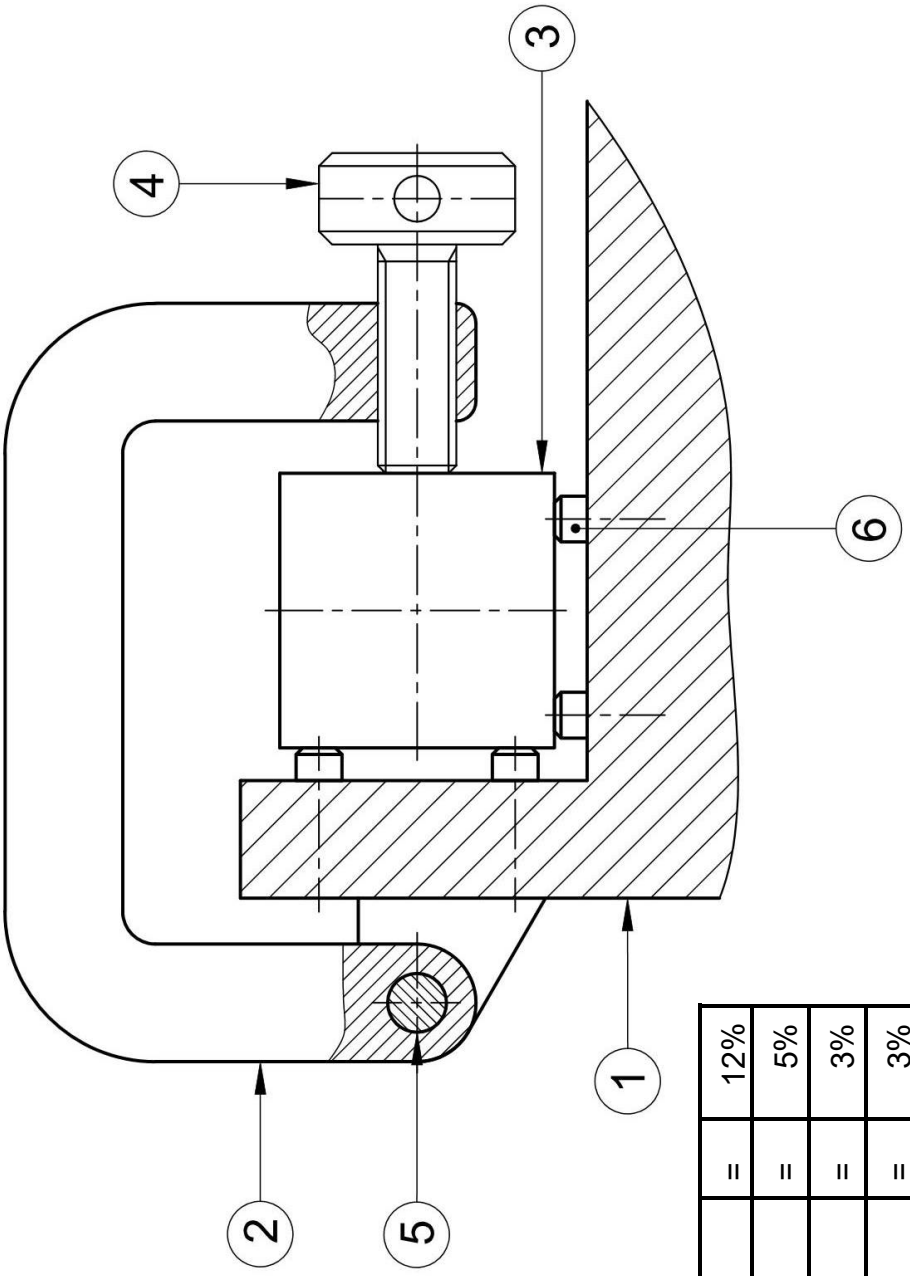

CORRECTNESS	=	12%
LINEWORK	=	5%
ACCURACY	=	3%
ITEM NUMBERS	=	3%
THREAD CONVENTIONS	=	3%
PARTS LIST	=	4%
TOTAL	=	30%

PARTS LIST			
ITEM NUMBER	**PART NAME**	**QUANTITY**	**MATERIAL**
ITEM 1	BASE	1 OF	CAST IRON
ITEM 2	G-CLAMP	1 OF	MILD STEEL
ITEM 3	WORKPIECE	1 OF	MILD STEEL
ITEM 4	SCREW	1 OF	MILD STEEL
ITEM 5	PIN	1 OF	MILD STEEL
ITEM 6	LOCATING PIN	8 OF	MILD STEEL

QUESTION 6

Layout, neatness and general impression of the answer sheet/s. **[5]**

TOTAL: 100

Copyright reserved