higher education & training

Department:
Higher Education and Training
REPUBLIC OF SOUTH AFRICA

NATIONAL CERTIFICATE

MECHANICAL DRAUGHTING N4

(8090204)

30 March 2020 (X-paper)
09:00–13:00

CLOSED-BOOK EXAMINATION

REQUIREMENTS: ONE A2 drawing sheet

Calculators, drawing instruments or CAD-software may be used.

This question paper consists of 5 pages and 4 diagram sheets.

007Q1A2030

Copyright reserved

DEPARTMENT OF HIGHER EDUCATION AND TRAINING
REPUBLIC OF SOUTH AFRICA

NATIONAL CERTIFICATE
MECHANICAL DRAUGHTING N4
TIME: 4 HOURS
MARKS: 100

INSTRUCTIONS AND INFORMATION

1. Answer all the questions.
2. Read all the questions carefully.
3. Number the answers according to the numbering system used in this question paper.
4. Use both sides of the DRAWING SHEET.
5. Draw a 15 mm border on both sides of the DRAWING SHEET.
6. Candidates using CAD-software must answer each question on a separate A3 or A4 DRAWING SHEET.
7. Before any drawing work is commenced, a border must be retrieved from the symbols directory and displayed on the screen when using a computer.
8. Print or plot all candidate information in ink in the title block. Do all other drawing work in pencil.
9. Use your discretion for dimensions not given.
10. Use a 3 mm fillet radius for all radii not given.
11. All standard symbols (mechanical) may be obtained from the symbols directory.
12. All drawing work must comply with the SANS 0111-1990 Code of Practice.
13. Candidates are responsible for the plotting of their own answers under suitable supervision.
14. Work neatly.

Copyright reserved

QUESTION 1: CONVENTIONAL REPRESENTATION

DIAGRAM SHEET 1 (attached) shows a cutaway picture view of a machine vice with the inner parts exposed.

Draw, to scale 2:1, a horizontal part view of the square thread detail given on DIAGRAM SHEET 1 to a length of 64 mm in conventional representation.

The thread data is as follows:

- Outside diameter: 24 mm
- Pitch: 8 mm
- Thread direction: SQ right-handed
- Length: 64 mm

Place a title and the scale centred beneath the completed drawing. **[10]**

QUESTION 2: CAM PROFILES

A cam profile is required which will impart motion to a roller follower.

Draw, to scale 1:1, the full profile of a disc cam using the following cam data:

- Minimum diameter: 30 mm
- Stroke height (lift/fall): 40 mm
- Shaft diameter: 20 mm
- Roller diameter: 10 mm
- Performance: Dwells for the first 60° of cam rotation
  Rises 40 mm for the next 90° of cam rotation with uniform velocity
  Dwells for the next 30° of cam rotation
  Falls 40 mm for the last 180° of cam rotation with motion of uniform acceleration and retardation
  Rotation of the cam is clockwise

Show the displacement diagram and all construction lines. The displacement diagram must be drawn on the left-hand side of the cam profile. The roller follower need not be shown on the drawing. Draw the shaft to show hatching detail. **[15]**

Copyright reserved

QUESTION 3: SECTIONAL DRAWING

DIAGRAM SHEET 2 (attached) shows two views of a casted bearing for a machine in first-angle orthographic projection.

Draw, to scale 1:1, the following views of the casting in third-angle orthographic projection:

3.1 A half-sectional front view on cutting plane X-X with the left half in section and showing hidden detail in the half not in section (9)

3.2 A half-sectional right view on cutting plane Y-Y with the right half in section (8)

3.3 Show only the following dimensions and symbols on the drawing:

3.3.1 At A: Machining must be done on this surface with a surface texture of 12 µm (1)

3.3.2 At B: A 32 diameter hole must be machined and the roughness value of the surface texture must be +25 µm and -20 µm (2)

[20]

QUESTION 4: DETAIL DRAWING

DIAGRAM SHEET 3 (attached) shows a full-sectional front view and a right view of a clapper box on a shaping machine in third-angle orthographic projection consisting of the following parts:

- Item 1 – Clapper box
- Item 2 – Clapper
- Item 3 – Securing pin
- Item 4 – Tool holder
- Item 5 – Securing screw
- Item 6 – Washer/Spacer

Draw, to scale 1:1, detail drawings of the following components in third-angle orthographic projection:

4.1 The clapper box unit (Item 1) showing the following:

4.1.1 A full-sectional front view (5)

4.1.2 A right view showing hidden detail (8)

4.1.3 Any SIX dimensions on the completed detail (2)

4.2 A front view of the tool holder (Item 4) showing the partial section of the threaded portion to show the convention of the drill and tapped hole as threaded detail as per conventional representation with no dashed lines (5)

[20]

Copyright reserved

QUESTION 5: ASSEMBLY DRAWING

DIAGRAM SHEET 4 (attached) shows the components of a drilling jig.

The complete parts list is as follows:

• Item 1	Base plate	1 off	Cast iron
• Item 2	Stem	1 off	Mild steel
• Item 3	Jig plate	1 off	Cast iron
• Item 4	Socket head screw	3 off	Mild steel
• Item 5	M20 stud	1 off	Mild steel
• Item 6	M20 nut	1 off	Mild steel
• Item 7	Bush	6 off	Steel
• Item 8	Latch washer	1 off	Mild steel
• Item 9	Shoulder screw	1 off	Mild steel
• Item 10	Workpiece	1 off	Mild steel

5.1 Draw, to scale 1:1, a full-sectional front view of the drilling jig as an assembly drawing. Show the workpiece in position with the drilled holes in section. (23)

5.2 Indicate all the item numbers on the completed sectional assembly. (3)

5.3 Show a parts list below the completed drawing on the DRAWING SHEET. (4)
[30]

QUESTION 6: LAYOUT AND NEATNESS

Layout, neatness and general impression of the DRAWING SHEET. **[5]**

TOTAL: 100

Copyright reserved

DIAGRAM SHEET 1

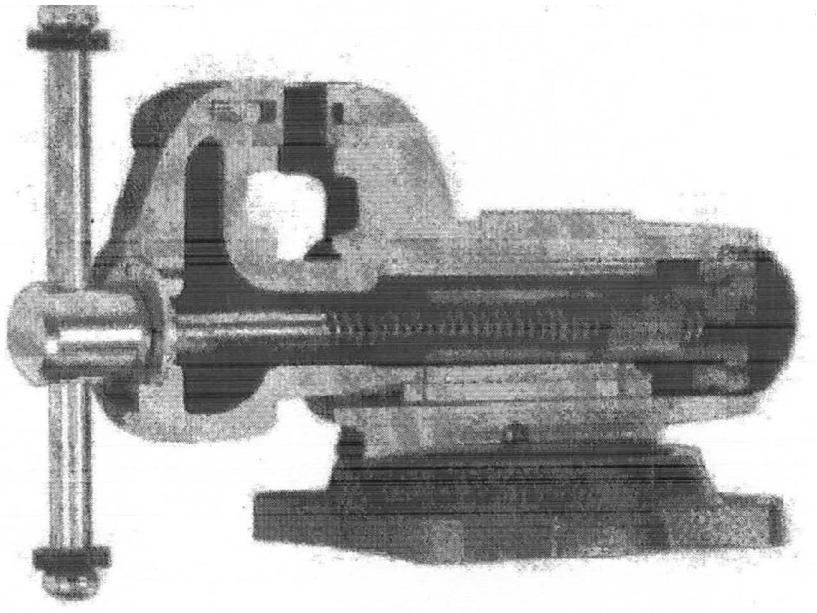

SQUARE THREAD ON A MACHINE VICE

Copyright reserved

DIAGRAM SHEET 2

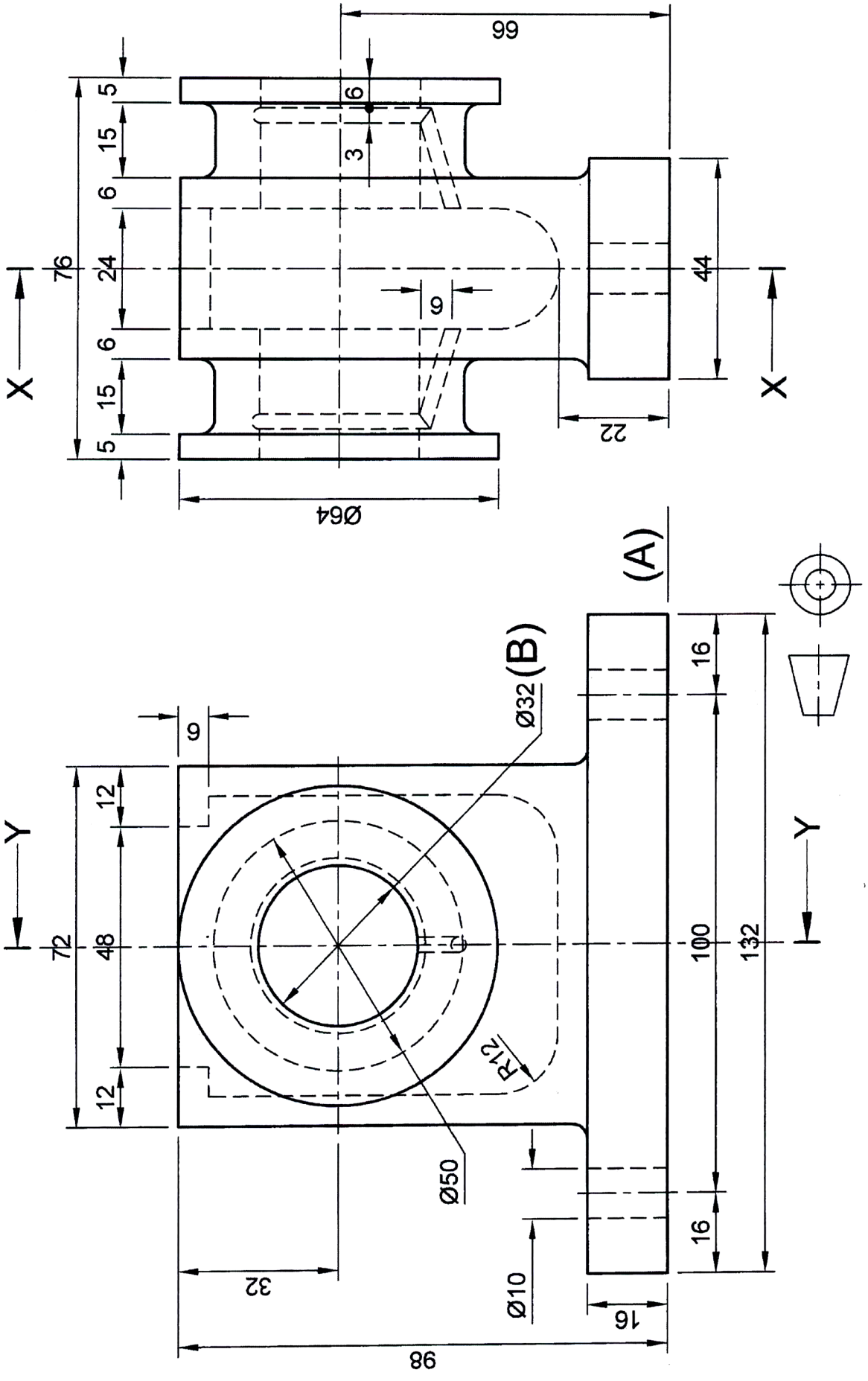

Copyright reserved

DIAGRAM SHEET 3

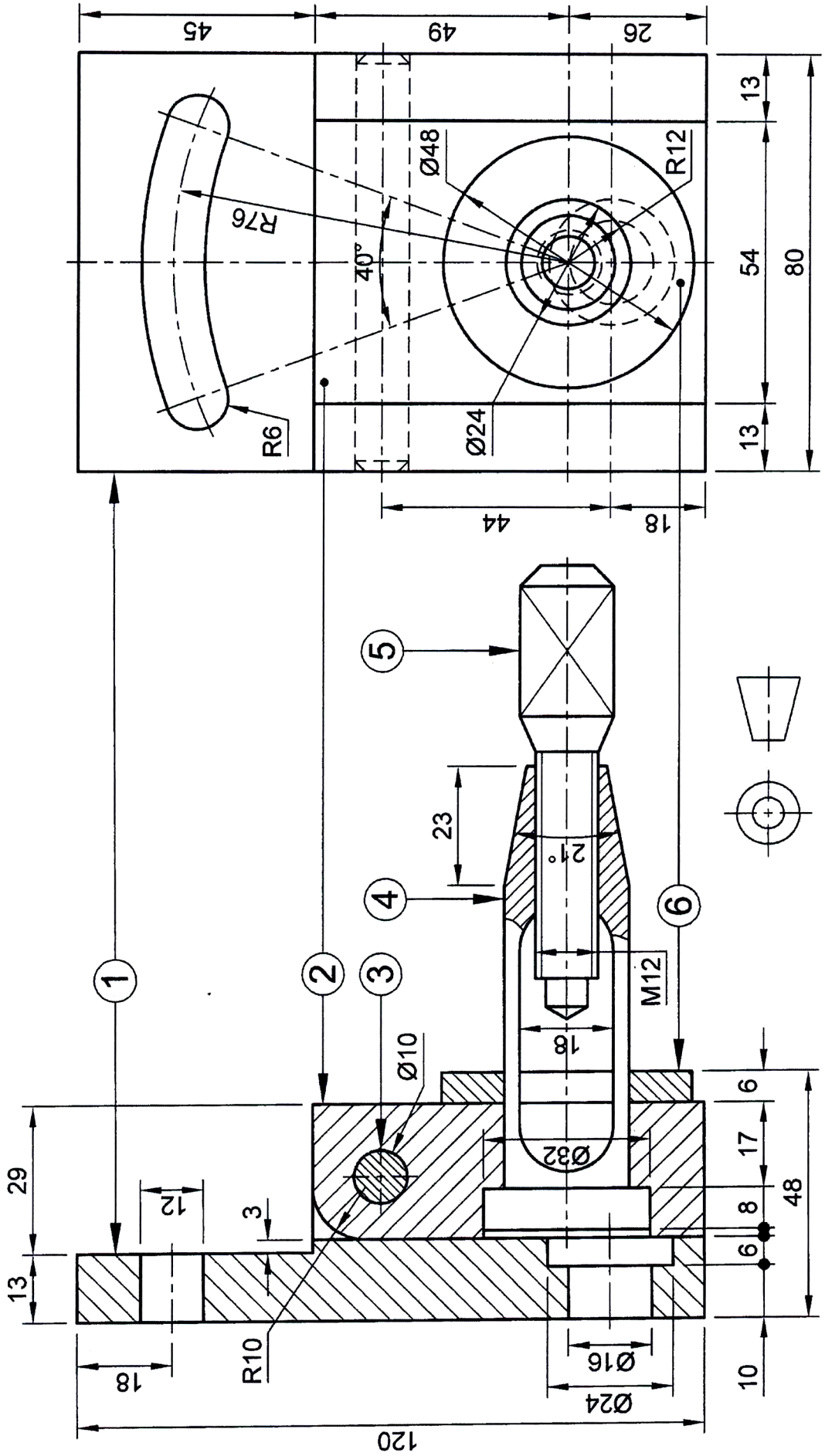

Copyright reserved

DIAGRAM SHEET 4

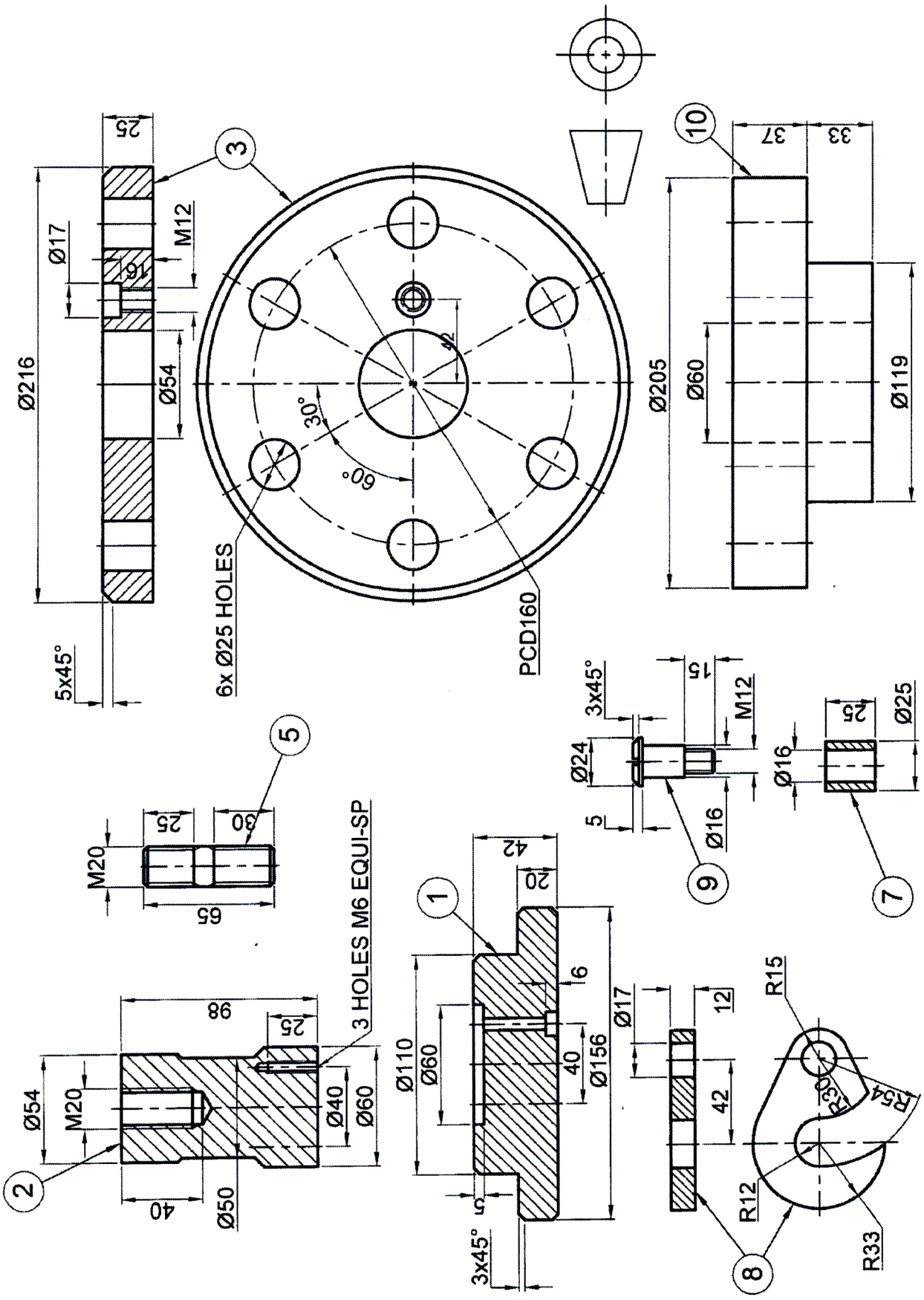

Copyright reserved