higher education & training

Department:
Higher Education and Training
REPUBLIC OF SOUTH AFRICA

MARKING GUIDELINE

NATIONAL CERTIFICATE

MECHANICAL DRAUGHTING N4

30 March 2020

This marking guideline consists of 7 pages.

Copyright reserved

QUESTION 1: CONVENTIONAL REPRESENTATION

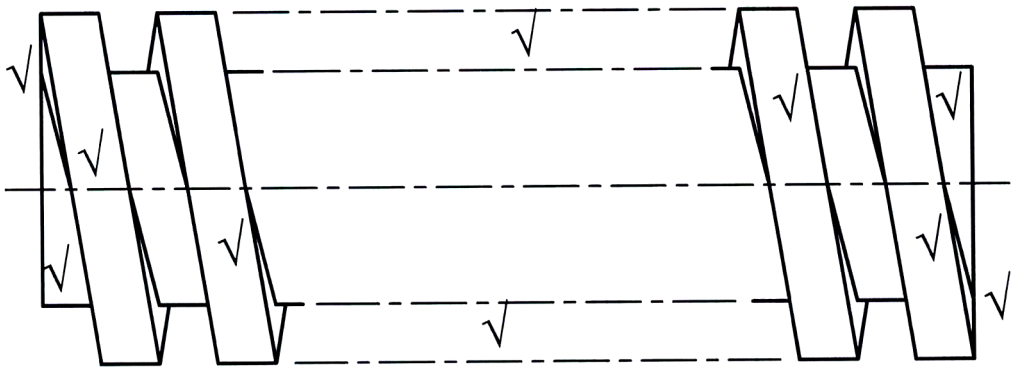

SCREW THREAD
SCALE 2:1

Correctness	6
Line work	3
Accuracy	1

[10]

QUESTION 2: CAM PROFILES

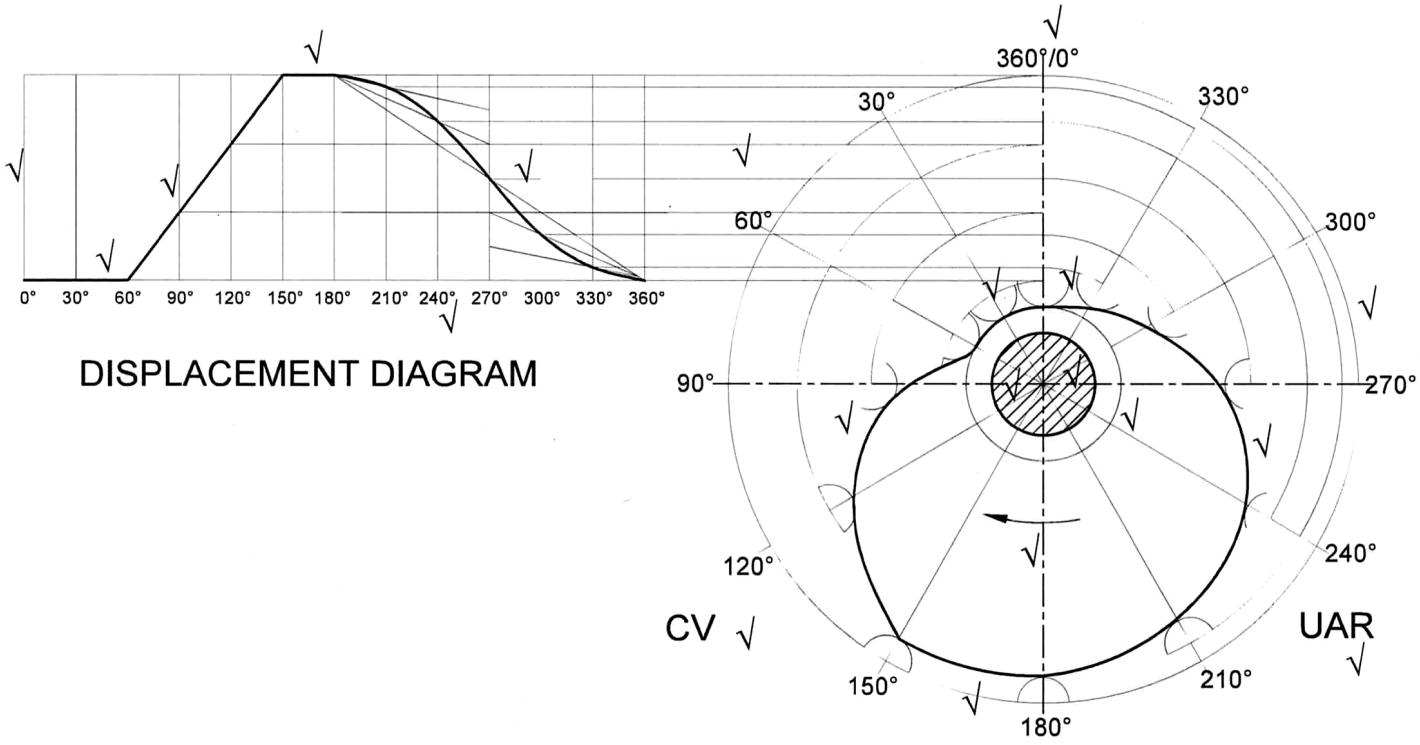

Displacement diagram	3
Cam profile	6
Line work	2
Accuracy	3
Shaft hatch detail	1

[15]

QUESTION 3: SECTIONAL DRAWING

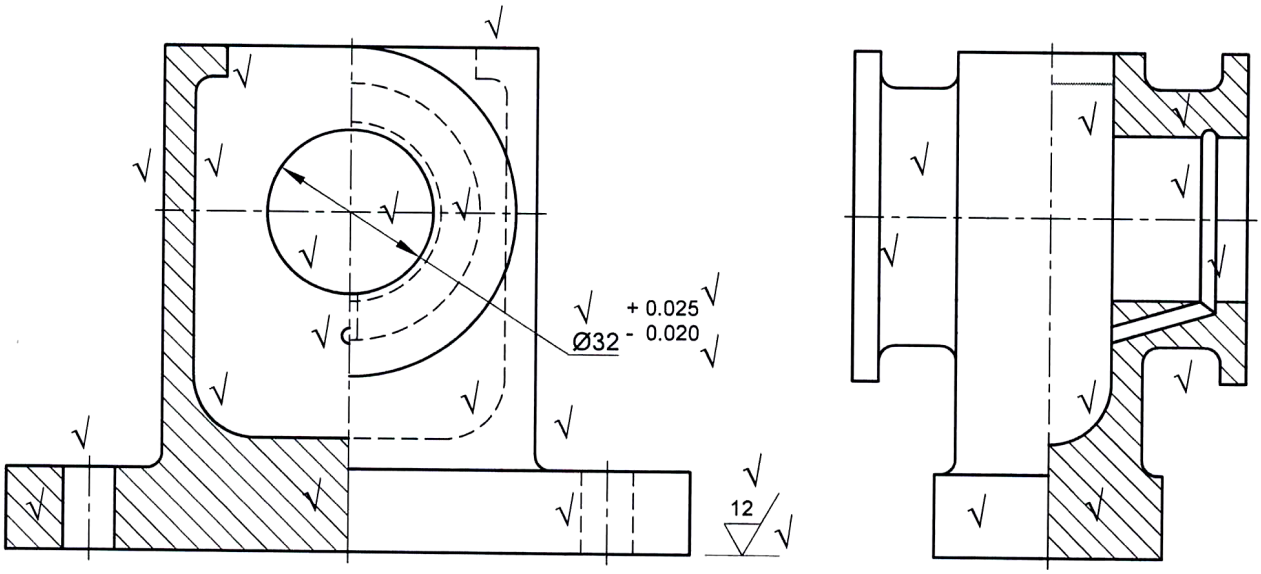

Correctness FV	7
Correctness RV	5
Line work	3
Accuracy	2
Symbols at A and B	3

[20]

QUESTION 4: DETAIL DRAWING

4.1

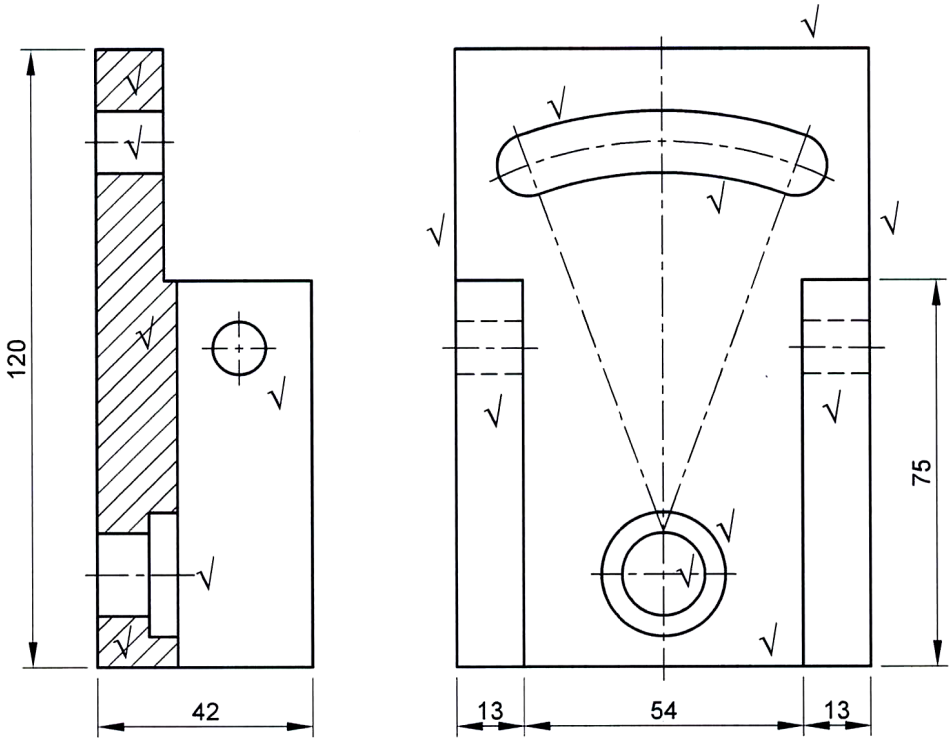

ITEM 1: CLAPPER BOX BLOCK

Correctness	3
Line work	1
Accuracy	1
Dimensions	1
Total	6

Correctness	5
Line work	2
Accuracy	1
Dimensions	1
Total:	9

(15)

4.2

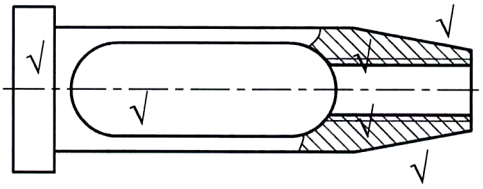

ITEM 4: TOOL HOLDER

Correctness	3
Line work	1
Accuracy	1

(5)
[20]

QUESTION 5: ASSEMBLY DRAWING

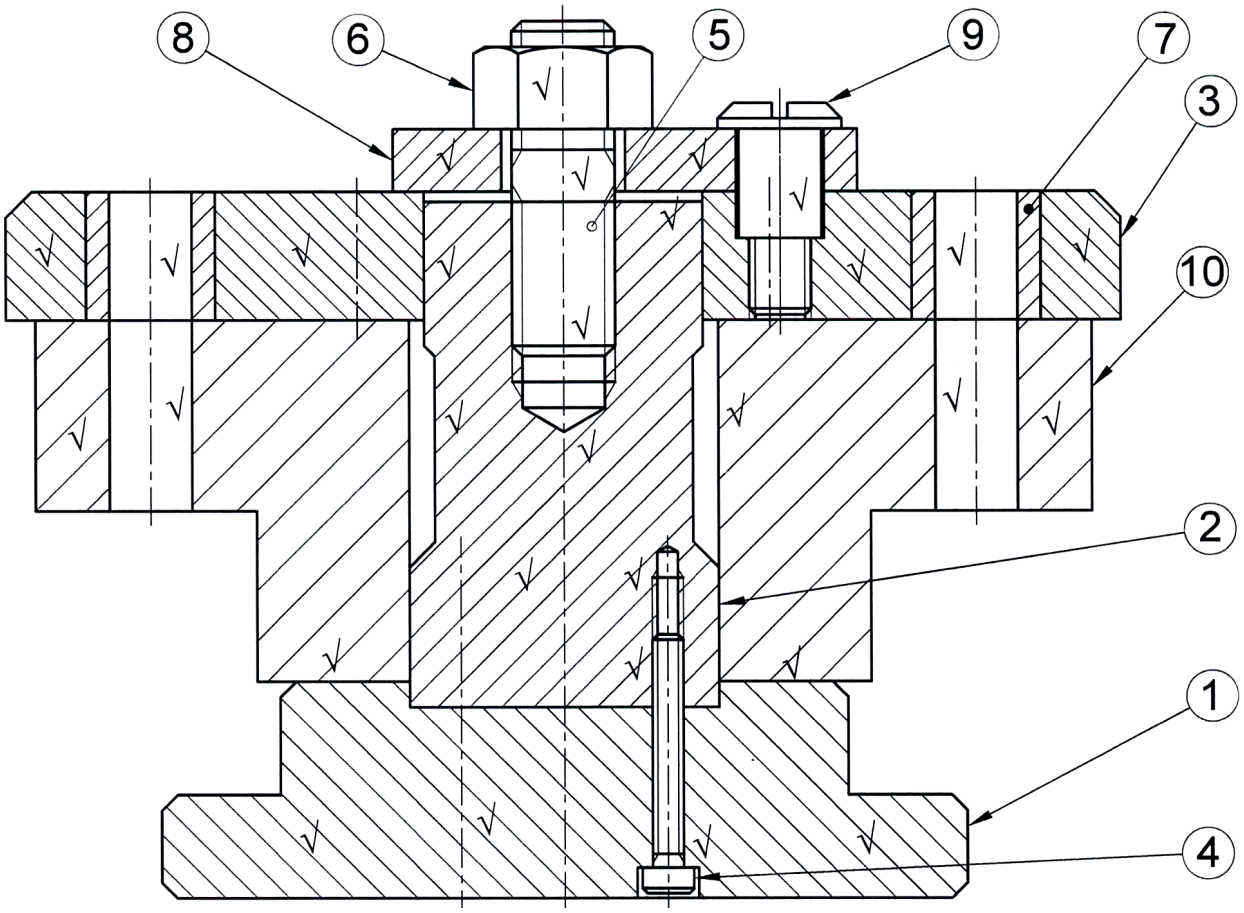

PARTS LIST			
ITEM NUMBER	**PART NAME**	**QUANTITY**	**MATERIAL**
ITEM 1	BASE PLATE	1 OFF	CAST IRON
ITEM 2	STEM	1 OFF	MILD STEEL
ITEM 3	JIG PLATE	1 OFF	CAST IRON
ITEM 4	SOCKET HEAD SCREW	3 OFF	MILD STEEL
ITEM 5	M20 STUD	1 OFF	MILD STEEL
ITEM 6	M20 NUT	1 OFF	MILD STEEL
ITEM 7	BUSH	6 OFF	STEEL
ITEM 8	LATCH WASHER	1 OFF	MILD STEEL
ITEM 9	SHOULDER SCREW	1 OFF	MILD STEEL
ITEM 10	WORKPIECE	1 OFF	MILD STEEL

Correctness	12
Line work	5
Accuracy	3
Item number	3
Thread convention details	3
Parts list	4

[30]

QUESTION 6: LAYOUT AND NEATNESS

Layout, neatness and general impression of the DRAWING SHEET. **[5]**

TOTAL: 100

Copyright reserved