higher education & training

Department:
Higher Education and Training
REPUBLIC OF SOUTH AFRICA

T1070**(E)**(M27)T

NATIONAL CERTIFICATE

MECHANICAL DRAUGHTING N4

(8090204)

27 March 2018 (X-Paper)
09:00–13:00

REQUIREMENTS: ONE A2 drawing sheet

Calculators and drawing instruments may be used.

This question paper consists of 9 pages.

Copyright reserved

DEPARTMENT OF HIGHER EDUCATION AND TRAINING
REPUBLIC OF SOUTH AFRICA

NATIONAL CERTIFICATE
MECHANICAL DRAUGHTING N4
TIME: 4 HOURS
MARKS: 100

INSTRUCTIONS AND INFORMATION

1. Answer ALL the questions.
2. Read ALL the questions carefully.
3. Number the answers according to the numbering system used in this question paper.
4. Use both sides of the DRAWING SHEET.
5. Draw a 15 mm border on both sides of the DRAWING SHEET.
6. ALL drawing work, including candidate information, must be done in pencil.
7. ALL drawing work must conform to the latest SABS 0111 Code of Practice for Engineering Drawing.
8. A radius curve stencil may be used to draw smaller arcs.
9. Unspecified radii must be 3 mm.
10. A balanced layout is important and candidates are advised to plan accordingly.
11. Estimate ALL dimensions NOT shown in a reasonable proportion.
10. Work neatly.

Copyright reserved

QUESTION 1

Cams are found in most branches of engineering to turn rotary motion into a perpendicular lift away from the shaft.

Draw, to scale 1 : 1, a full profile of a disc cam for a motor manufacturing company with the following specifications:

Follower: Knife-edge

Cam data:

Shaft diameter:	30 mm
Minimum diameter:	36 mm
Stroke height (lift/fall):	40 mm
Performance:	Rises 40 mm in the first 180° of cam rotation according to uniform acceleration and retardation. Dwells for the next 30° of cam rotation. Falls 40 mm in the next 150° of cam rotation according to constant velocity. The rotation of the cam is clockwise.

Show the displacement diagram and ALL construction lines. The displacement diagram must be drawn on the left-hand side of the cam profile.

NOTE: The knife-edge follower need NOT be drawn. **[15]**

QUESTION 2: SCREW THREAD

A company is awarded a contract to manufacture lead screws for a lathe machine.

Draw, to scale of 1 : 2, a sectional front view of a right-hand internal square thread.

The details are as follows:

Length of the screw thread:	112 mm
Nominal diameter:	104 mm
Pitch:	28 mm

[10]

Copyright reserved

QUESTION 3: SECTIONAL DRAWING

FIGURE 1 on the next page shows two views of a machine casting.

Draw, to scale 1 : 1, the following views of the casting in third-angle orthographic projection:

3.1 A sectional front view on cutting plane X–X (9)

3.2 A sectional right view on cutting plane Y–Y (9)

Insert only the following symbols and dimensions on the drawing:

3.3 At A: Indicate that a hole with a diameter of 22 mm has an upper deviation of 15 micrometres and a lower deviation of -0 micrometre. (1)

3.4 At B: Indicate a distance 30 mm with an upper deviation of 10 micrometres and a lower deviation of -15 micrometres. (1)

Copyright reserved

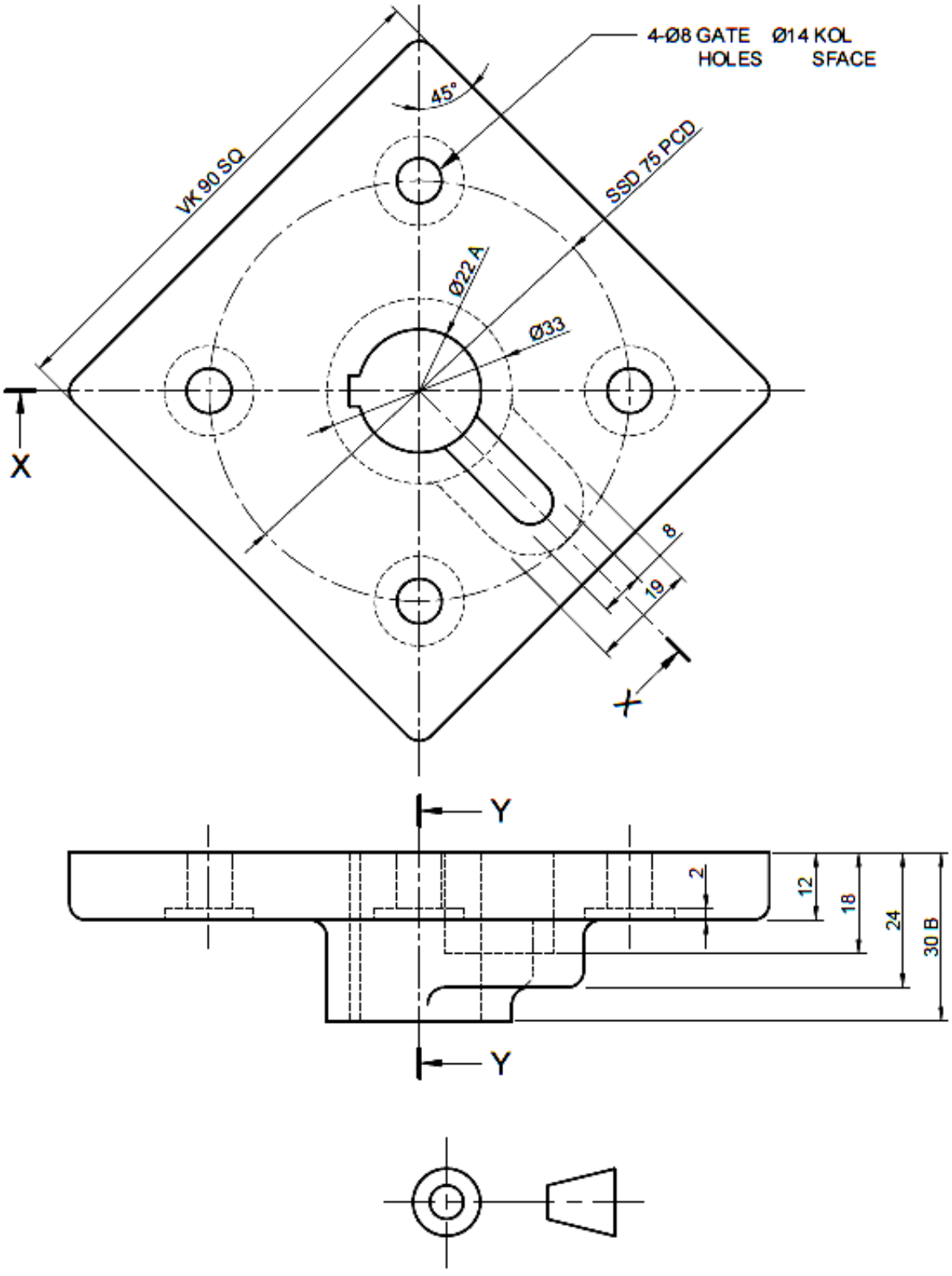
4-Ø8 GATE HOLES
Ø14 KOL SFACE
45°
VK 90 SQ
SSD 75 PCD
Ø22 A
Ø33
X
8
19
Y
Y
2
12
18
24
30 B

FIGURE 1 **[20]**

QUESTION 4: DETAIL DRAWING

FIGURE 2 on the next page shows a front view of a belt drive assembly which consists of the following:

ITEM	DESCRIPTION
1	Pulley keyway 3 mm deep
2	Body
3	Shaft
4	Bush
5	Half-moon key 3 mm wide
6	Washer
7	Hexagon nut

Draw, to scale 1 : 1, detail drawings of the following components in third-angle orthographic projection:

4.1 The shaft (Item 3) showing a front view (show keyway) (6)

4.2 The pulley (Item 1) showing the following:

4.2.1 A half-sectional front view with the top half in section (9)

4.2.1 A right view (NO hidden detail is required) (5)

Copyright reserved

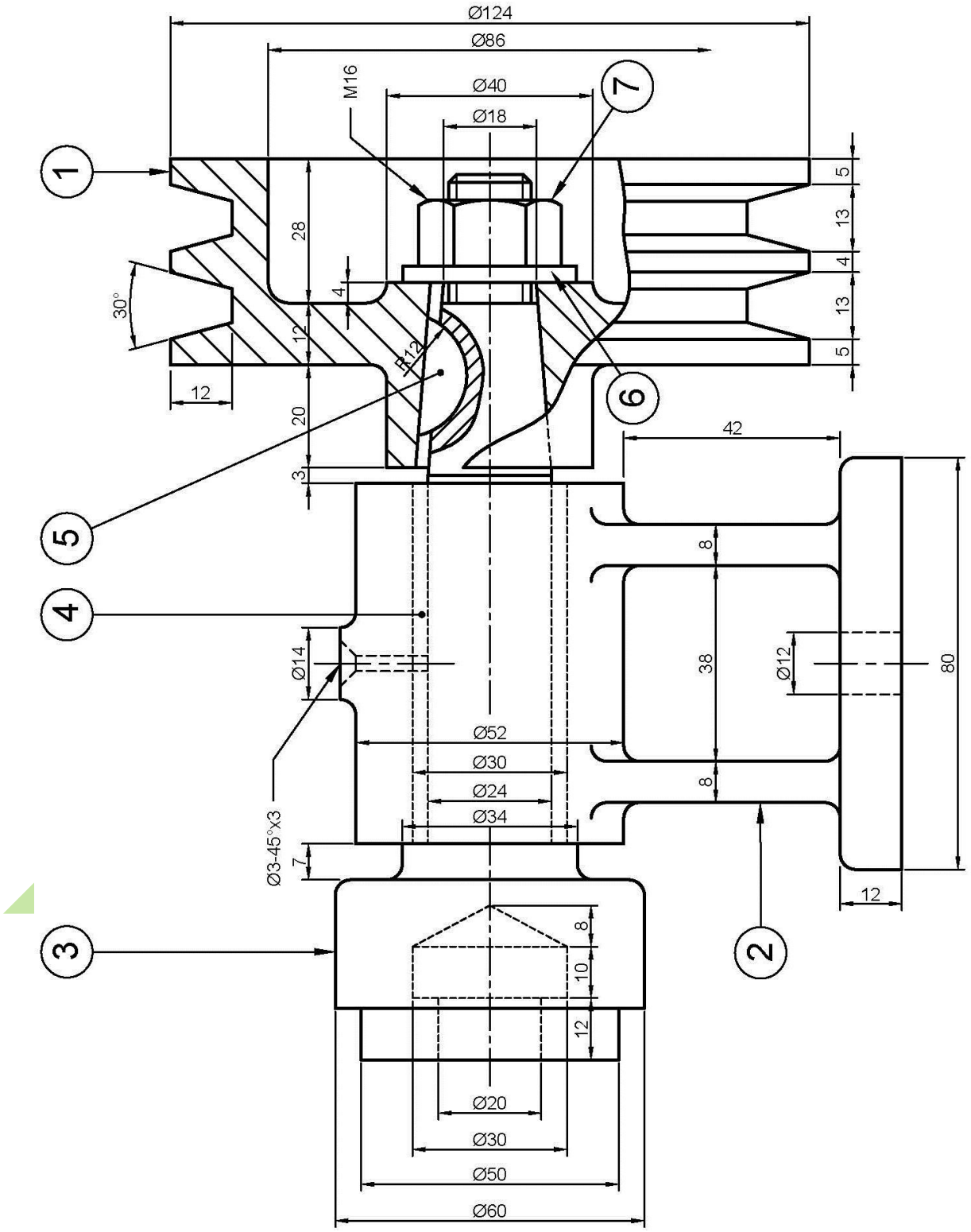

FIGURE 2 **[20]**

Copyright reserved

QUESTION 5

FIGURE 3 on the next page shows the components of a stuffing box for a cylinder.

The complete list of parts is as follows:

ITEM	PART	AMOUNT	MATERIAL
Item 1	Cover	1	Cast steel
Item 2	Cylinder	1	Cast iron
Item 3	Gland	1	Cast iron
Item 4	Neck bush	1	Bronze
Item 5	Rod	1	High-carbon steel
Item 6	Packing	1	Asbestos-graphite
Item 7	Stud	6	Low-carbon steel
Item 8	Stud	2	Low-carbon steel
Item 9	Hexagon nut	6	Low-carbon steel
Item 10	Hexagon nut	2	Low-carbon steel

Draw, to scale 1 : 1, an assembly showing a full-sectional front view of the pressure reducing valve.

Indicate item numbers on the assembly drawing. **[30]**

NOTE: Layout, neatness and general impression of the DRAWING SHEET. **[5]**

Copyright reserved

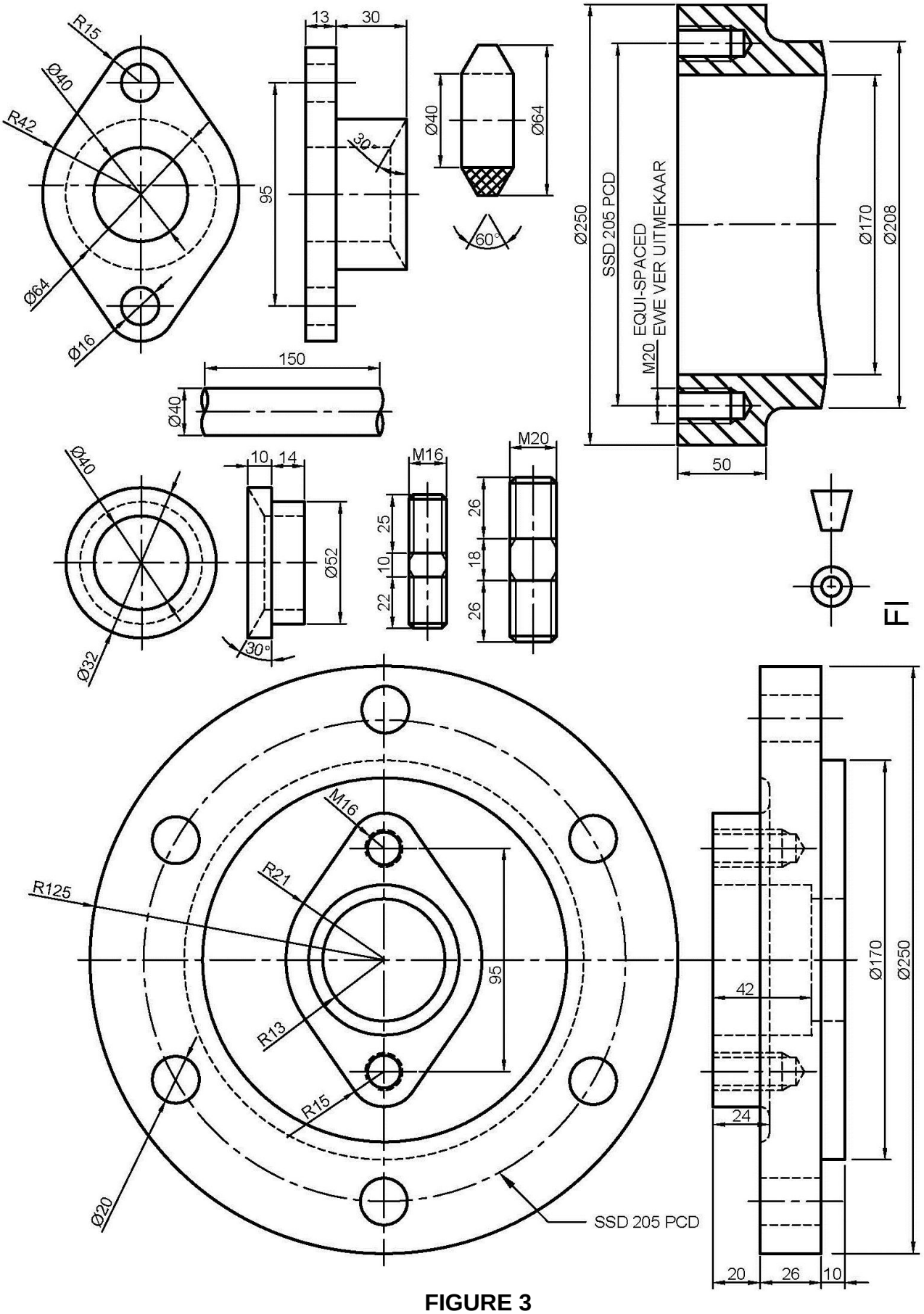

FIGURE 3

TOTAL: 100

Copyright reserved