higher education & training

Department:
Higher Education and Training
REPUBLIC OF SOUTH AFRICA

MARKING GUIDELINE

NATIONAL CERTIFICATE

MECHANICAL DRAUGHTING N4

27 MARCH 2018

This marking guideline consists of 8 pages.

Copyright reserved

INSTRUCTIONS AND INFORMATION

1. ALL marking centre managers must be aware that the copying and transferring of drawings from CAD to Microsoft Word may affect the accuracy of drawings.

2. ALL markers must have a fully completed marking guideline to use in the marking process.

Copyright reserved

QUESTION 1

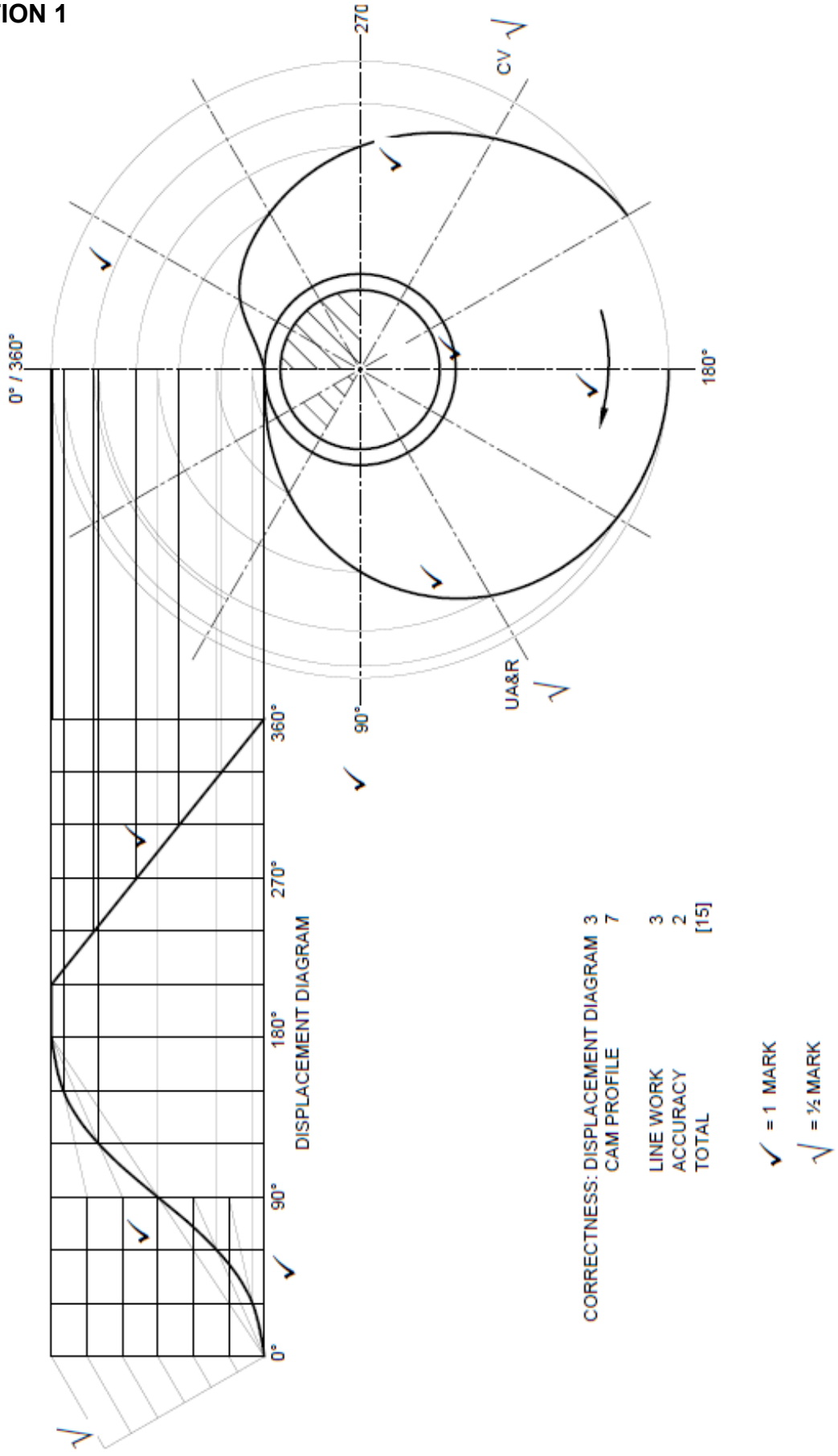

CORRECTNESS: DISPLACEMENT DIAGRAM 3
CAM PROFILE 7

LINE WORK 3
ACCURACY 2
TOTAL [15]

✓ = 1 MARK

√ = ½ MARK

[15]

QUESTION 2: SCREW THREAD

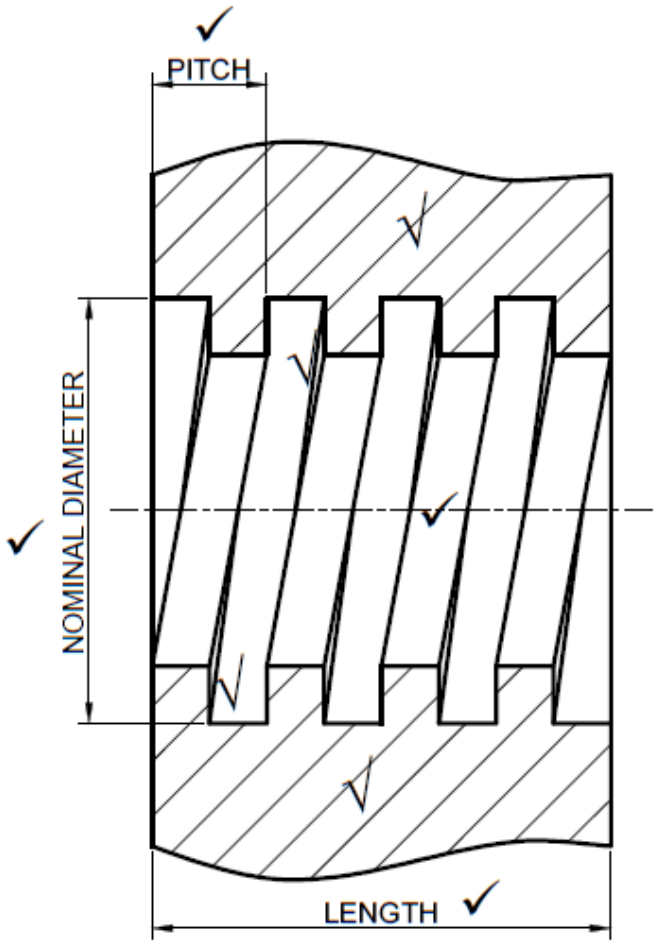

CORRECTNESS:	LENGTH	1
	NOMINAL DIAMETER	1
	PITCH	1
	DIRECTION	1
	INTERNAL	1
	DETAIL	1
LINE WORK		2
ACCURACY		2
TOTAL		[10]

✓ = 1 MARK

√ = ½ MARK

[10]

QUESTION 3: SECTIONAL DRAWING

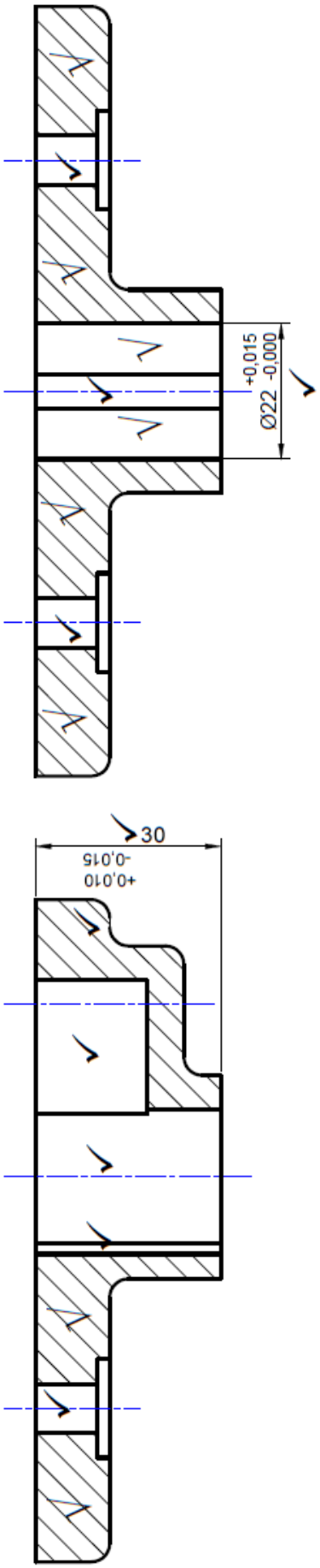

CORRECTNESS F/V	6
R/V	6
LINE WORK	3
ACCURACY	3
MACHINING SYMBOLS	2
TOTAL	20

= 1 MARK

= ½ MARK

[20]

QUESTION 4: DETAIL DRAWING

4.1

CORRECTNESS	4
LINE WORK	1
ACCURACY	1
TOTAL	6

√ = 1 MARK

√ = ½ MARK

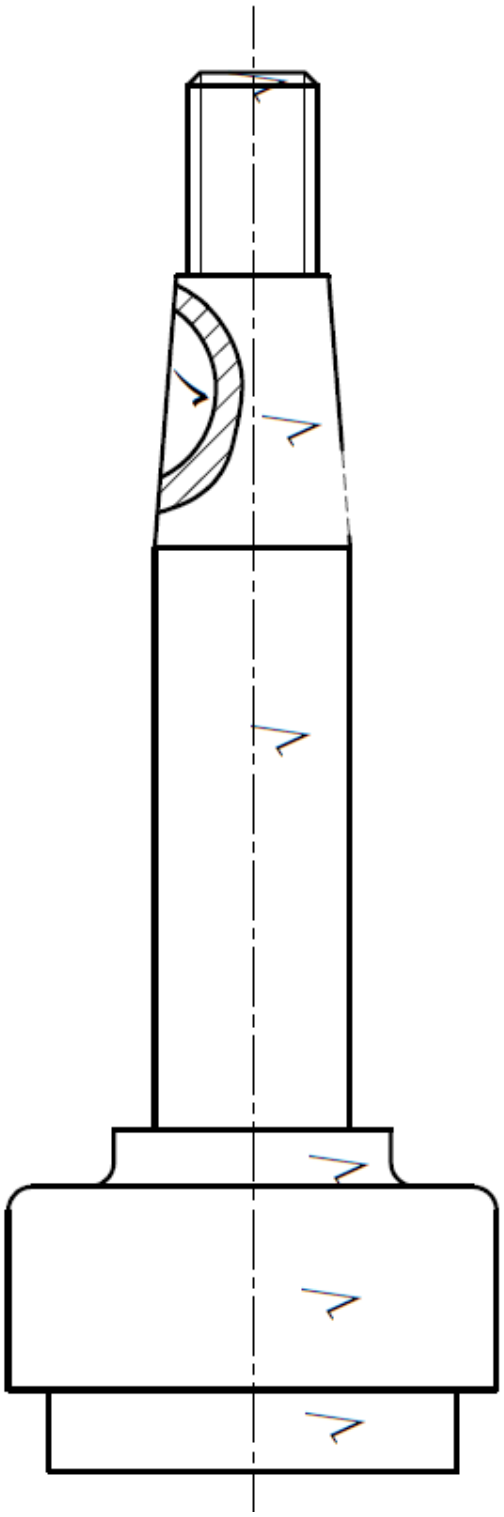

4.2

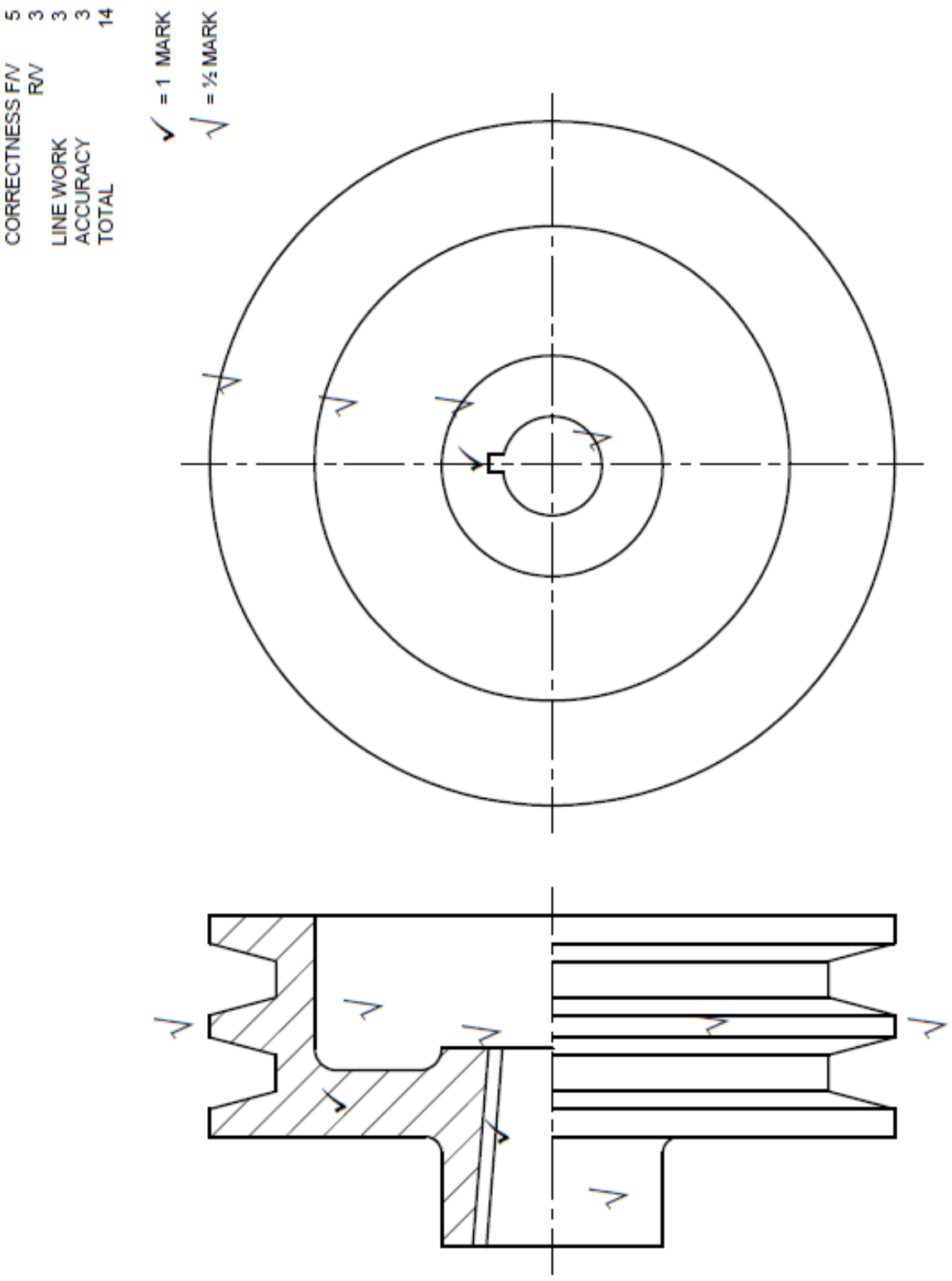
CORRECTNESS F/V 5
R/V 3
LINE WORK 3
ACCURACY 3
TOTAL 14
✓ = 1 MARK
√ = ½ MARK

[20]

QUESTION 5

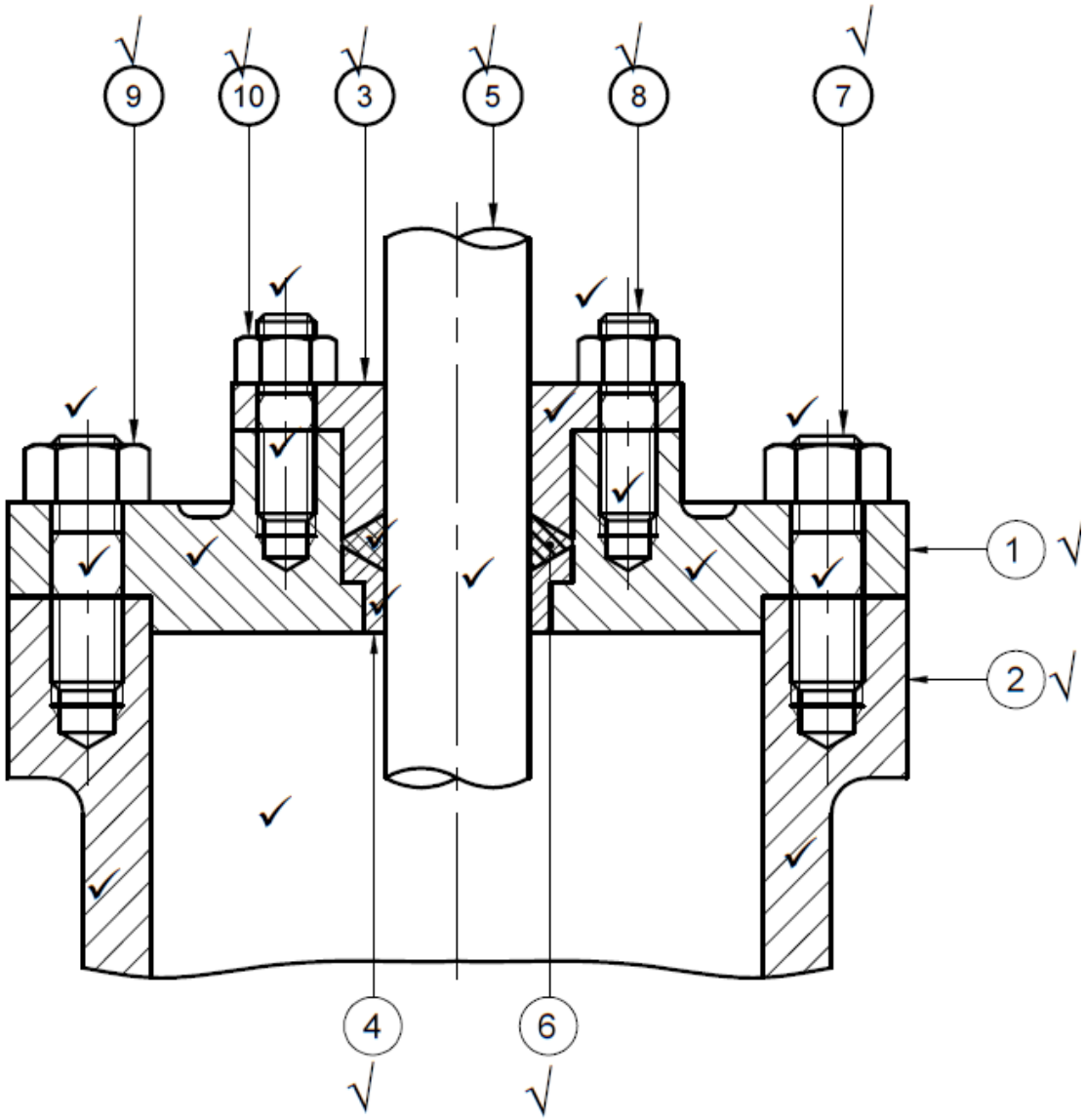

Correctness	17
Line work	4
Accuracy	4
Item numbers	5
Total	[30]

Overall layout, neatness and general impression of the answer sheet	[5]

✓ = 1 MARK

√ = ½ MARK

[35]

TOTAL: 100

Copyright reserved