higher education & training

Department:
Higher Education and Training
REPUBLIC OF SOUTH AFRICA

NATIONAL CERTIFICATE

MATHEMATICS N5

(16030175)

13 August 2021 (X-paper)
09:00–12:00

Scientific calculators and drawing instruments may be used.

This question paper consists of 5 pages and a formula sheet of 4 pages.

313Q1G2113

Copyright reserved

DEPARTMENT OF HIGHER EDUCATION AND TRAINING
REPUBLIC OF SOUTH AFRICA

NATIONAL CERTIFICATE
MATHEMATICS N5
TIME: 3 HOURS
MARKS: 100

INSTRUCTIONS AND INFORMATION

1. Answer all the questions.
2. Read all the questions carefully.
3. Number the answers according to the numbering system used in this question paper.
4. Show all intermediate steps and simplify where possible.
5. All final answers must be rounded off to THREE decimals.
6. Questions may be answered in any order, but subsections of questions must be kept together.
7. Sketches must be large, neat and fully labelled
8. Start each question on a new page.
9. Only use a black or a blue pen.
10. Write neatly and legibly.

Copyright reserved

QUESTION 1

1.1 Determine the following limits:

1.1.1 $\lim\limits_{x\to 3}\dfrac{3-x}{\sqrt{x+1}-\sqrt{5x-11}}$ (3)

1.1.2 $\lim\limits_{x\to -1}\dfrac{\dfrac{1}{4+3x}+\dfrac{1}{x}}{x+1}$ (2)

1.2 Given: $\ln y = \lim\limits_{x\to 4}\ \frac{\cos(x-4)-1}{2x-8}$, calculate the numerical value of:

1.2.1 $\ln y$ (2)

1.2.2 y (1)

1.3 Determine the value(s) of x for which $f(x)$ is discontinuous if:

$$f(x)=\frac{\sin 2x}{\cos 2x}$$ (2)

[10]

QUESTION 2

2.1 Given:

$$f(x)=-5x^7$$

Determine the simplest form of:

2.1.1 $f(x+h)$ (2)

2.1.2 $f(x+h)-f(x)$ (1)

2.1.3 $\dfrac{f(x+h)-f(x)}{h}$ (1)

2.1.4 $\lim\limits_{h\to 0}\dfrac{f(x+h)-f(x)}{h}$ (1)

2.2 Determine $\frac{dy}{dx}$ in each of the following cases:

(Simplification not required.)

2.2.1 $y=\tan[(5-x^2)(\ln^2 x)]$

2.2.2 $y=\sqrt[4]{\cos(9-x^2)+\sqrt{\ln x}}$

(2 × 4) (8)

Copyright reserved

2.3 Calculate $\frac{dy}{dx}$ if $y = \frac{\sin(3x+x^2)}{(6-x^4)^3}$ with the aid of logarithmic differentiation (4)

2.4 Determine $\frac{dy}{dx}$ of implicit function $\cos(x^2 + 2y) + xe^{y^2} = 1$ (5)

[22]

QUESTION 3

3.1 Given: $f(x) = 2x^3 + x^2 - x + 2$

3.1.1 Determine the coordinate of the point of inflection of $f(x)$ (2)

3.1.2 Draw up a table of x and $f(x)$, where x is ranging from $x = -2$ to $x = 2$ (3)

3.1.3 Draw a neat graph of $f(x)$ between these values and show the turning points on it. (2)

3.1.4 One root of the equation $2x^3 + x^2 - x + 2 = 0$ is close to $-1{,}5$.

Use Taylor's/Newton's method twice to determine a better approximation of this root (root correct to THREE decimals). (4)

3.2 We want to build a rectangular box with a base length 6 times the base width, and the box will enclose 20 m^3. The cost of the material of the sides is R3/m^2 and the cost of the top and bottom is R15/m^2.

Determine the dimensions of the box that will minimize the cost. (6)

[17]

QUESTION 4

4.1 Determine $\int y\,dx$ in each of the following cases.

4.1.1 $y = \sec^2 2x(9 + 7\tan 2x - \tan^2 2x)$ (4)

4.1.2 $y = \frac{7x+2}{\sqrt{1-25x^2}}$ (4)

4.1.3 $y = \frac{3x^3 - 17x^2 + 18x + 10}{3x + 1}$ (5)

4.1.4 $y = \sin^3 x \cos x$ (2)

4.1.5 $y = x\sec^2 x$ (4)

Copyright reserved

4.2 Determine $\int y\,dx$ by resolving the integral into partial fractions:

$$y = \frac{x+5}{(x-3)(x+1)}$$

(5)
[24]

QUESTION 5

5.1 Evaluate the definite integral:

$$\int_3^7 \left[\frac{9e^x}{e^x+4} + \frac{(\ln 2x)^2}{x}\right] dx$$

(5)

5.2 Given : $y = 8x - 2x^2$ and x-axis.

5.2.1 Calculate the coordinates of the points of intersection. (2)

5.2.2 Make a neat sketch to show the enclosed area, the representative strip and the point of intersection. (2)

5.2.3 Calculate the magnitude of the area in QUESTION 5.2.2. (3)

5.2.4 Calculate the volume of the solid of revolution formed when the area in QUESTION 5.2.2 is rotated about the x-axis. (4)

5.3 Calculate the moment of inertia of a flywheel of radius 30 cm and thickness of 3 cm about an axis through its centre and perpendicular to the flywheel. The mass of the flywheel is 15 kg.

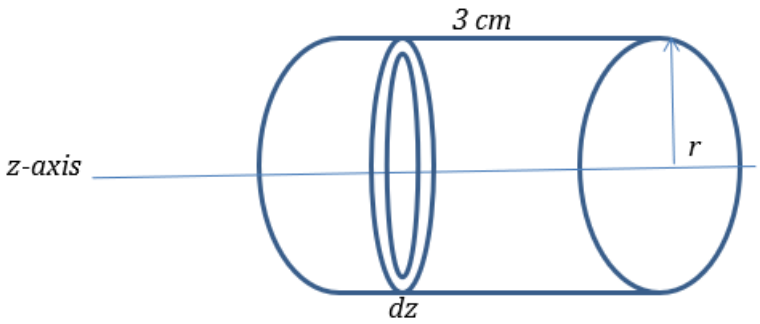

(4)
[20]

QUESTION 6

6.1 Determine the particular solution of: $\frac{dy}{dx} = -\frac{x}{ye^{x^2}}$ ‘ $(0;1)$ (4)

6.2 Determine the general solution of:

$$\operatorname{cosec} x \,.\, \frac{d^2y}{dx^2} = 1 + \cot x + \frac{x^2}{\sin x}$$

(3)
[7]

TOTAL: 100

Copyright reserved

MATHEMATICS N5

FORMULA SHEET

Any applicable formula may also be used

TRIGONOMETRY

$\sin^2 x + \cos^2 x = 1$
$1 + \tan^2 x = \sec^2 x$
$1 + \cot^2 x = \text{cosec}^2 x$
$\sin 2A = 2 \sin A \cos A$
$\cos 2A = \cos^2 A - \sin^2 A$

$$\tan 2A = \frac{2 \tan A}{1 - \tan^2 A}$$

$\sin^2 A = {}^1/_2 - {}^1/_2 \cos 2A$
$\cos^2 A = {}^1/_2 + {}^1/_2 \cos 2A$

$\sin(A \pm B) = \sin A \cos B \pm \sin B \cos A$
$\cos(A \pm B) = \cos A \cos B \pm \sin A \sin B$

$$\tan(A \pm B) = \frac{\tan A \pm \tan B}{1 \pm \tan A \tan B}$$

$\sin A \cos B = {}^1/_2 [\sin(A + B) + \sin(A - B)]$
$\cos A \sin B = {}^1/_2 [\sin(A + B) - \sin(A - B)]$
$\cos A \cos B = {}^1/_2 [\cos(A + B) + \cos(A - B)]$
$\sin A \sin B = {}^1/_2 [\cos(A - B) - \cos(A + B)]$

$$\tan x = \frac{\sin x}{\cos x}; \sin x = \frac{1}{cosec\ x}; \cos x = \frac{1}{\sec x}$$

BINOMIAL THEOREM

$$(x + h)^n = x^n + \text{n}x^{n-1}\, h + \frac{n(n-1)}{2!} x^{n-2}\, h^2 + \cdots$$

DIFFERENTIATION

$$e = -\frac{f(a)}{f'(a)}$$
$r = a + e$

PRODUCT RULE

$\text{y} = \text{u}(x) \,.\, v(x)$
$$\frac{dy}{dx} = u \,.\, \frac{dv}{dx} + v \,.\, \frac{du}{dx}$$
$= u \,.\, v' + v \,.\, u'$

Copyright reserved

QUOTIENT RULE

$y = \frac{u(x)}{v(x)}$

$\frac{dy}{dx} = \frac{v\,.\,\frac{du}{dx} - u\,.\,\frac{dv}{dx}}{v^2}$

$\frac{v\,.\,u' - u\,.\,v'}{v^2}$

CHAIN RULE

$y = f\big(u(x)\big)$

$\frac{dy}{dx} = \frac{dy}{du}\,.\frac{du}{dx}$

$f(x)$	$\frac{d}{dx}f(x)$	$\int f(x)dx$

---

ax^n	nax^{n-1}	$\frac{ax^{n+1}}{n+1} + c$
a	0	$ax + c$
e^x	e^x	$e^x + c$
a^x	$a^x . lna$	$\frac{a^x}{lna} + c$
$\log_e x$	$\frac{1}{x}$	___
$\log_a x$	$\frac{1}{xlna}$	___
$\sin x$	$\cos x$	$-\cos x + c$
$\cos x$	$-\sin x$	$\sin x + c$
$\tan x$	$\sec^2 x$	$ln(\sec x) + c$
$\cot x$	$-\operatorname{cosec}^2 x$	$ln(\sin x) + c$
$\sec x$	$\sec x\,.\tan x$	$ln[\sec x + \tan x] + c$
$\operatorname{cosec} x$	$-\operatorname{cosec} x\ .\cos x$	$ln(\operatorname{cosec} x + \cot x) + c$
$\sin^{-1} x$	$\frac{1}{\sqrt{1-x^2}}$	___
$\cos^{-1} x$	$\frac{-1}{\sqrt{1-x^2}}$	___
$\tan^{-1} x$	$\frac{1}{1+x^2}$	___
$\cot^{-1} x$	$\frac{-1}{1+x^2}$	___
$\sec^{-1} x$	$\frac{1}{\sqrt{x^2-1}}$	___
$\operatorname{cosec}^{-1} x$	$\frac{-1}{x\sqrt{x^2-1}}$	___

Copyright reserved

$f(x)$	$\frac{d}{dx}f(x)$	$\int f(x)dx$
$\frac{1}{\sqrt{a^2-x^2}}$	—	$\sin^{-1}\left(\frac{x}{a}\right)+c$
$\frac{1}{a^2+x^2}$	—	$\frac{1}{a}\tan^{-1}\left(\frac{x}{a}\right)+$ c
$\frac{1}{x\sqrt{x^2+a^2}}$	—	$\frac{1}{a}\sec^{-1}\left(\frac{x}{a}\right)+c$
$\sqrt{a^2-x^2}$	—	$\frac{a^2}{2}\sin^{-1}\left(\frac{x}{a}\right)+\frac{x}{2}\sqrt{a^2-x^2}\ +c$
$\frac{1}{x^2-a^2}$	—	$\frac{1}{2a}ln\left(\frac{x-a}{x+a}\right)+c$
$\frac{1}{a^2-x^2}$	—	$\frac{1}{2a}ln\left(\frac{a+x}{a-x}\right)+c$

INTEGRATION

$$\int f(x)\ g'(x)\ dx = f(x)\ g(x) - \int f'(x)g\ (x)dx$$

$$\int \frac{f'(x)}{f(x)}dx = ln\ f(x)\ + c$$

$$\int [f(x)]^n\ f'(x)dx = \frac{[f(x)]^{n+1}}{n\ +1} + c$$

$$\frac{f(x)}{(ax+b)(cx\ +d)} = \frac{A}{ax\ +b} + \frac{B}{cx\ +d}$$

$$\frac{f(x)}{(x\ +a\ )^n} = \frac{A}{(x\ +a)} + \frac{B}{(x\ +a)^2} + \frac{C}{(x+a)^3} + \cdots \frac{Z}{(x\ +a)^n}$$

APPLICATIONS OF INTEGRATION

AREAS

$$A_x = \int_a^b ydx\ ;\ A_x = \int_a^b (y_1 - y_1)dx$$

$$A_x = \int_a^b xdy\ ; A_{Y=} \int_a^b (x_1 - x_2)dy$$

Copyright reserved

VOLUMES

$V_x = \pi \int_a^b y^2\,dx\;;\; V_{X=\pi} \int_a^b (y_1^2 - y_2^2)dx$

$V_y = \pi \int_a^b x^2\,dy\;;\; V_{y=\pi} \int_a^b (x_1^2 - x_2^2)dy$

SECOND MOMENT OF AREA

$$I_x = \int_a^b r^2\,dA\;;\; I_{y=} \int_a^b r^2\,dA$$

MOMENT OF INERTIA

$Mass = density \times volume$

$M = pv$

$DEFINITION: I = m\,r^2$

$GENERAL: I = \int_a^b r^2 dm = p \int_a^b r^2 dV$

Copyright reserved