higher education & training

Department:
Higher Education and Training
REPUBLIC OF SOUTH AFRICA

NATIONAL CERTIFICATE

MATHEMATICS N3

(16030143)

3 April 2020 (X-paper)
09:00–12:00

This question paper consists of 6 pages and 2 formula sheets.

090Q1A2003

Copyright reserved

DEPARTMENT OF HIGHER EDUCATION AND TRAINING
REPUBLIC OF SOUTH AFRICA
NATIONAL CERTIFICATE
MATHEMATICS N3
TIME: 3 HOURS
MARKS: 100

INSTRUCTIONS AND INFORMATION

1. Answer all the questions.
2. Read all the questions carefully.
3. Programmable calculators are not allowed for this question paper.
4. Number the answers according to the numbering system used in this question paper.
5. Questions may be answered in any order, but keep subsections together.
6. Show all calculations and intermediate steps.
7. All graph work in the question paper must be done in the answer book.
8. All final answers must be accurately rounded off to three decimal places.
9. Diagrams are not drawn to scale.
10. Write neatly and legibly.

Copyright reserved

QUESTION 1

1.1 Factorise the following expression completely:

$4(m-n)^2+5(m-n)-6$ (3)

1.2 Use the factor and remainder theorem to factorise $f(x)=x^3+6x^2+11x+6$ (5)

1.3 Simplify the following:

$$\frac{3-x}{2x^2-x-3}+\frac{2}{9-6x}+\frac{4}{5x+5}$$ (7)

[15]

QUESTION 2

2.1 Simplify the following:

$$\frac{1}{(x+y)^{-1}}-\left(x^{\frac{1}{2}}-y^{\frac{1}{2}}\right)^2$$ (3)

2.2 Solve for x without using a calculator, showing your working.

2.2.1 $\log_a x\times\log_3 a=4$ (5)

2.2.2 $$\frac{6}{\sqrt{3x-1}}-1=\sqrt{3x-1}$$ (6)

[14]

QUESTION 3

3.1 The sum of the reciprocals of two consecutive odd numbers is $\frac{12}{35}$. Find the numbers. (5)

3.2 Make x the subject of the formula:

$B=ab^{x-1}$ (5)

3.3 Given that 2 is one of the roots of the quadratic equation $7x^2-(2k-1)x+k+9=0$

3.3.1 Prove that the value of $k=13$. (2)

3.3.2 Determine the product of the two roots. (3)

[15]

Copyright reserved

QUESTION 4

The quadrilateral ABCD is shown in FIGURE 1. The vertices of quadrilateral ABCD are as follows: A (-10;13), B (-16; -1), C (-8; -12) and D (2;8).

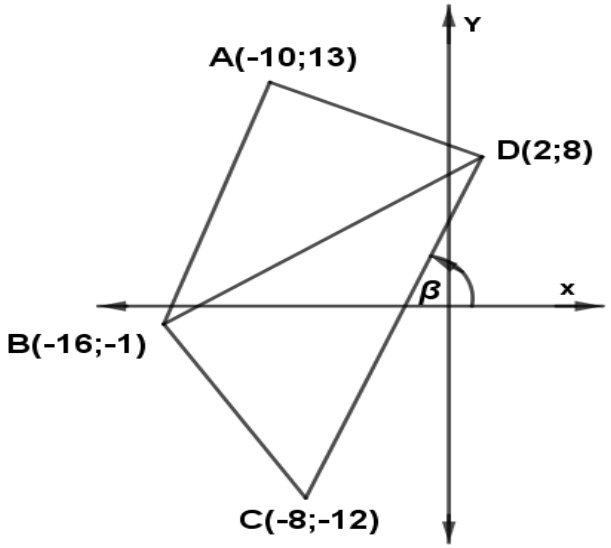

FIGURE 1

Determine:

4.1 The gradient of line CD (2)

4.2 The size of β, the angle of inclination between line CD and the $x-axis$ (2)

4.3 The length of the diagonal line of quadrilateral ABCD joining points B and D. Leave the answer in the simplest surd form. (3)

4.4 The equation of the line passing through point D that is perpendicular to BD. Leave the answer in the gradient-intercept form. (5)

4.5 The equation of the line passing through point C that is parallel to BD. Leave the answer in the gradient-intercept form. (3)

4.6 The coordinates of the point of intersection of the following two given lines:

A line through point D that is parallel to the $x-axis$ AND the line $y=-2x+2$ (3)

[18]

QUESTION 5

5.1 Draw the graph of the following equation in the ANSWER BOOK. Calculations need NOT be shown. ALL values at the points of intersection with axes must be shown.

$$y = \pm\sqrt{36 - x^2}$$ (3)

5.2 Determine $\frac{dy}{dx}$ of the following function by using the rules of differentiation. Leave the final answer with positive exponents and in surd form where applicable.

$$y = \frac{1}{2x^4} - \frac{6}{x^{-\frac{1}{3}}} + ba^2$$ (5)

5.3 Given: $f(x) = x^3 - 3x^2$

5.3.1 Make use of differentiation to determine the coordinates of the turning points of the graph of $f(x)$. (5)

5.3.2 Draw the graph of the given equation. Show ALL the values at the points of intersection with the system of axes and the coordinates of the turning points. (4)

[17]

QUESTION 6

6.1 Use basic trigonometric identities to prove that:

$$\frac{\sin B}{1+\cos B}+\frac{1}{\tan B}=\frac{1}{\cos B\tan B} \quad (5)$$

6.2 Calculate the value(s) of x that will satisfy the following equation if $0^o \le x \le 180^o$:

$$\sin\left(\frac{1}{2}x+10^o\right)=1 \quad (3)$$

6.3 Study FIGURE 2. AB is a building, 30 m high and x metres away from a nearby tower CD. The building and tower stand on the same horizontal plane. From A, the angle of elevation to the top of the tower, D, is 45°, and from B, the angle of elevation to D is 60°.

Determine H, the height of tower CD.

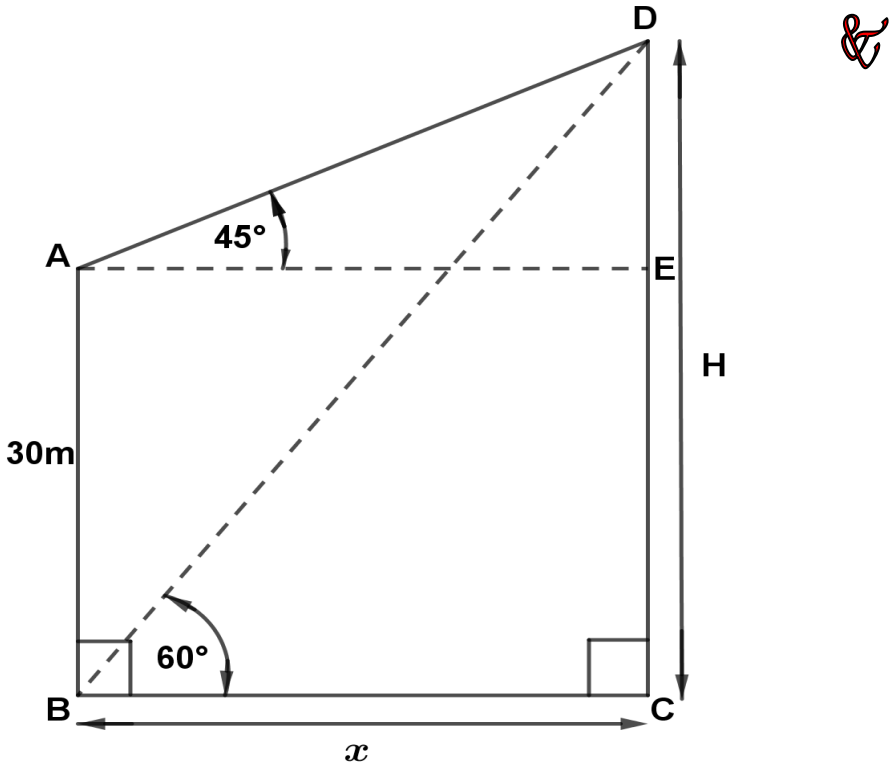

FIGURE 2 (7)

6.4 Draw the graph of $f(x)=5\sin 4x$ for $0^0 \le x \le 90^0$, showing the coordinates of all the turning points and the intercepts with the axes. (6)

[21]

TOTAL: 100

Copyright reserved

MATHEMATICS N3

FORMULA SHEET

Any applicable formula may also be used.

1. **Factors**

$a^3 - b^3 = (a - b)(a^2 + ab + b^2)$
$a^3 + b^3 = (a + b)(a^2 - ab + b^2)$

2. **Logarithms**

$\log ab = \log a + \log b \quad \log \frac{a}{b} = \log a - \log b$

$\log_b a = \frac{\log_c a}{\log_c b}$

$\log a^m = m \log a$

$\log_b a = \frac{1}{\log_a b}$

$\log_a a = 1 \quad \ln e = 1$
$a^{\log_a t} = t \quad e^{\ln m} = m$

3. **Quadratic formula**

$$x = \frac{-b \pm \sqrt{b^2 - 4ac}}{2a}$$

4. **Parabola**

$y = ax^2 + bx + c$
$y = \frac{4ac - b^2}{4a}$
$x = \frac{-b}{2a}$

5. **Circle**

$x^2 + y^2 = r^2$
$D = \frac{x^2}{4h} + h$
$x = \sqrt{4Dh - 4h^2}$

6. **Straight line**

$y - y_1 = m(x - x_1)$

Perpendicular: $m_1 \cdot m_2 = -1$
Parallel lines: $m_1 = m_2$
Distance: $D = \sqrt{(x_2 - x_1)^2 + (y_2 - y_1)^2}$
Midpoint: $P = \left(\frac{x_1 + x_2}{2}; \frac{y_1 + y_2}{2}\right)$
Angle of inclination: $\theta = \tan^{-1} m$

7. **Differentiation**

$\frac{dy}{dx} = \lim_{h \to 0} \frac{f(x+h) - f(x)}{h}$
$\frac{d}{dx}(x^n) = nx^{n-1}$
Max/Min
For turning points: $f'(x) = 0$

Copyright reserved

8. **Trigonometry**

$$\sin\theta = \frac{y}{r} = \frac{1}{\operatorname{cosec}\theta}$$

$$\cos\theta = \frac{x}{r} = \frac{1}{\sec\theta}$$

$$\tan\theta = \frac{y}{x} = \frac{1}{\cot\theta}$$

$$\sin^2\theta + \cos^2\theta = 1$$

$$1 + \tan^2\theta = \sec^2\theta$$

$$1 + \cot^2\theta = \operatorname{cosec}^2\theta$$

$$\tan\theta = \frac{\sin\theta}{\cos\theta}$$

$$\cot\theta = \frac{\cos\theta}{\sin\theta}$$

$$\frac{\sin A}{a} = \frac{\sin B}{b} = \frac{\sin C}{c}$$

$$a^2 = b^2 + c^2 - 2bc\cos A$$

Copyright reserved